X FORCE

MANUALE DI ISTRUZIONI

INSTRUCTION MANUAL

ASSEMBLY

1) Fix legs to the cabinet by using proper bolts located inside cash box.
2) Pull out power cord with care and put it inside its proper housing. Make sure of knot against wrench.
3) Remove elastic belt from lights board and raise the board to the upright position, then fix it by proper sliding bracket to the right hand. Remove backglass and fix light board by proper bolts.
4) Adjust pinball inclination as shown by the drawing here below. If legs of different size are utilized, height doesn't correspond but the difference between front and back legs must be 7 cm.
When high back stool with stereo speakers is mounted, front legs must be 72 cm. maximum, otherwise the two feet of front legs do not fit inside stool housing.

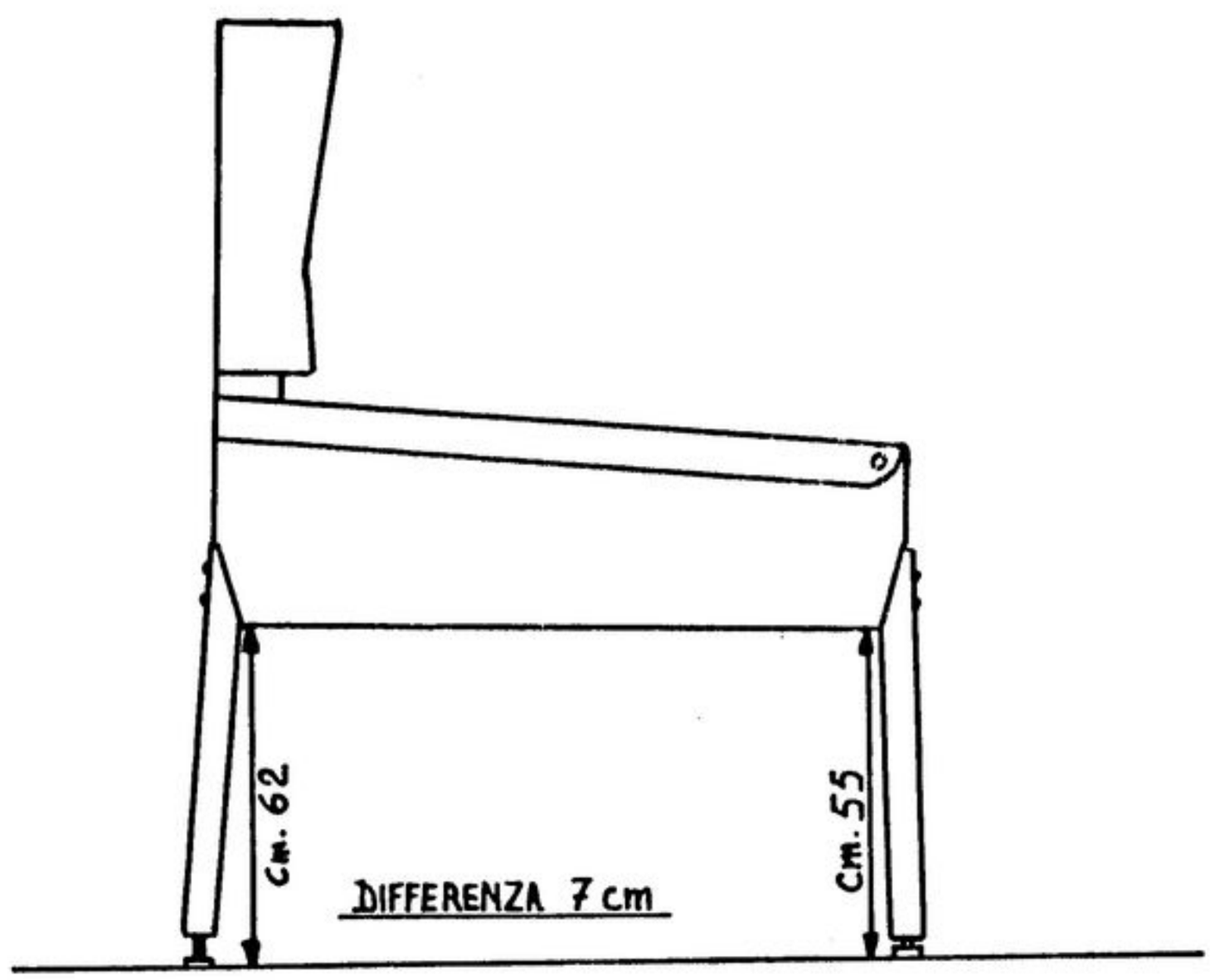

Per un buon funzionamento dell'apparecchio si raccomanda di rispettare le quote indicate nel disegno. Le quote indicano la distanza in verticale dal pavimento al fondo del mobile. Quando si applica l'audiosgabello le quote diventeranno cm. 64 e CM. 57.

For good game operation, observe height as indicated above, 62 and 55 cm. from the floor to the bottom of the cabinet.
When audio stool is installed, height will be 64 and 57 cm.

DISEGNO DI INSIEME E POSIZIONE CONTROLLI
ASSEMBLY DRAWING AND CONTROL LOCATIONS

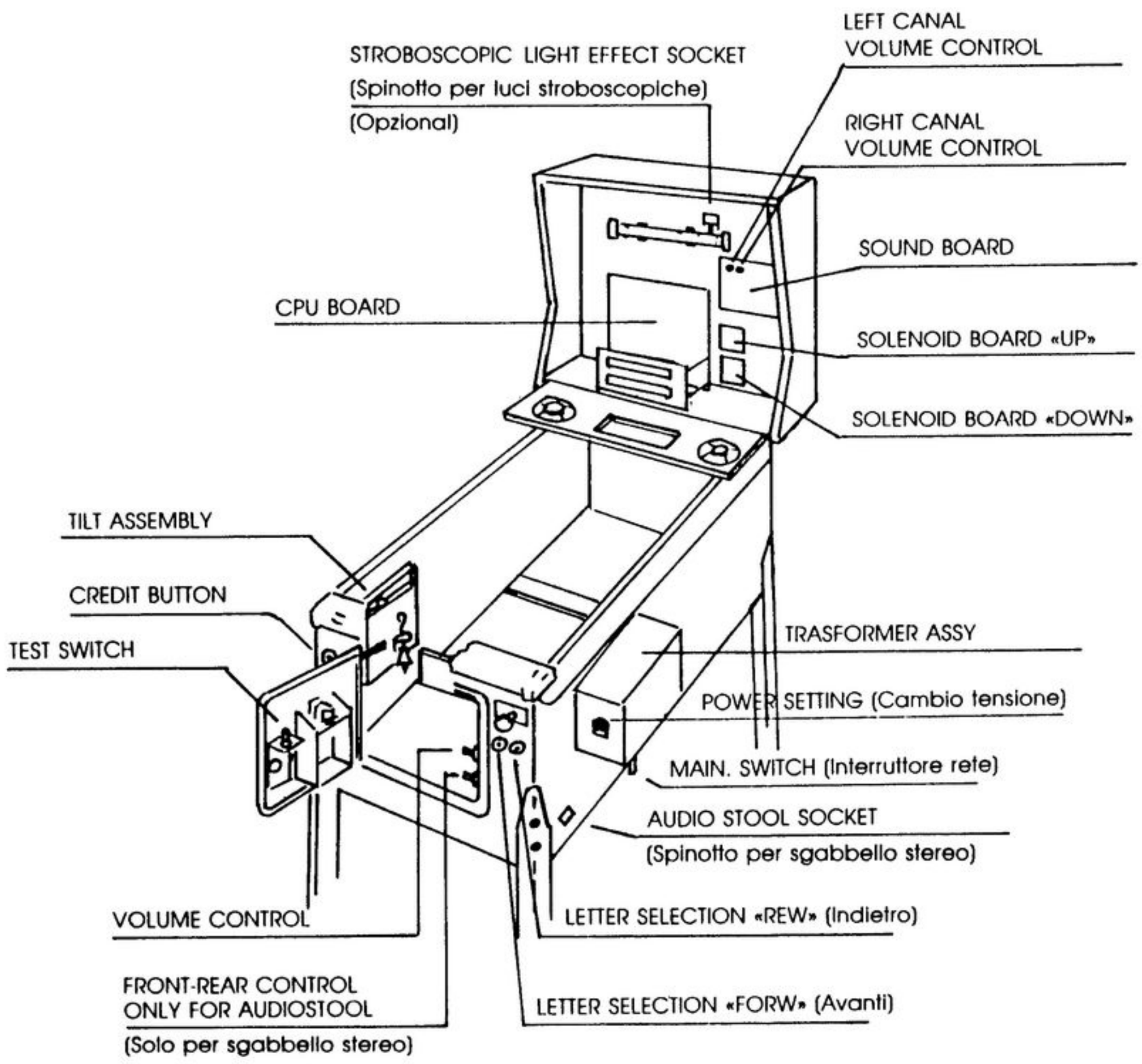

GENERAL OPERATION

CHECK FOLLOWING POINTS BEFORE SWITCHING THE MACHINE ON:

1) Make sure correct voltage is selected (Voltage selection is located on transformer box visible from coin door)

2) Make sure all the connectors are firmly connected (they may get unthreaded during transportation)

3) Check tilt contacts sensivity (all in open position)

NOTICE
Ground wire (yellow/green) of power cord must be connected.
The Manufacturer is not responsible for any damage due to wrong installation.

4) Plug the pinball in and switch it on.

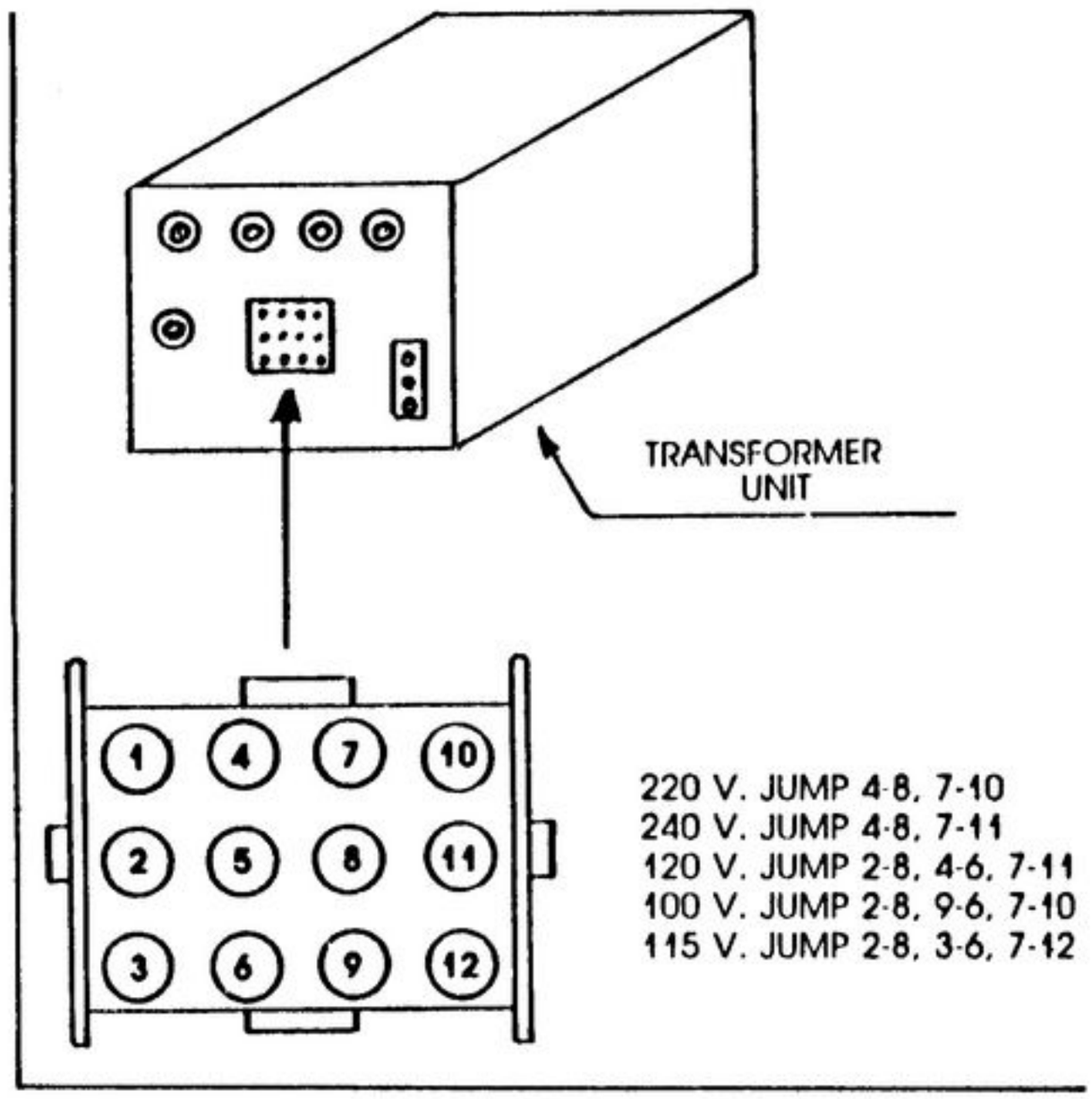

— Displays lit show: INSERT COIN, 1 TO 6 PLAYERS CAN PLAY, entered advertising message and 5 highest scores in sequence from 1st to 5th.

— Playfield lamps start flashing in track mode.

— 10 sec. of background music indicate correct operation of sounds.

— When credits are inserted CREDIT ... - 3 BALLS PER GAME - PRESS START BUTTON - are displayed alternatively.

— When 1/2 credit is inserted ONE MORE COIN PLEASE is displayed.

— Put the 4 balls inside hole, one by one are released automatically.

— Insert some credits and press CREDIT button, 1st ball is released and game starts.

— When in game over, match is displayed in two numbers (if match setting is YES MATCH). When the numbers correspond to play score one credit is given.
When more than one player is playing the credit is given to the first player having correspondent number.

— When one of the 5 highest scores is overcome after match, INSERT YOUR INITIALS is displayed. Select letters by pressing LETTER SELECTION button to the right hand and enter them by CREDIT button. Each letter can be selected in 8 sec. maximum.
After this function GAME OVER is displayed with end of play music.
YOU CAN CONTINUE THE GAME IF YOU INSERT COIN IN 10 SECONDS appears immediatly after. Balls captured on the bridge during the play are held and squad can be completed by the next play.
Up to 6 players can play. Scoreof player on play is displayed on 1st line, score of the other players appears one by one on 2nd display line.

ACCOUNTING CONTROL

Any time program is reviewed, answer following questions first:
What is present program?
What is winning average?
Is the play too long?
Is the play too short?
Is maximum score to be reset?
Pinball accounting must be checked in the interest of the operator. Income is good when player is excited to play. Best operation is win average between 25 and 30% in locations with customary clients, 10% with play win on match and 1 ball or score win on Specials in seasonal locations.
Maximum score is increased any time a player overcomes it, up to unattainable score.
Score reset to the minimum (8.000.000 points) after few weeks is recommended.

ROUTINE MAINTENANCE

Some pieces of advise are given here below in order to maintain the machine in good order and avoid unnecessary service calls. It is still more important to maintain the machine in optimal conditions for the players. It is well known that players lose interest in the game if the machine does not work well, if flippers and bumpers do not react well, if playfield is dirty, lights are burnt out, etc.
The following operations should be carried out any time the machine is adjusted, even when it is working all right.

1) Check and tighten, if necessary, screws of ring holding posts.
2) Check rings and replace them when necessary. Adjust contacts any time rings are replaced.
3) Clean playfield with care. Do not use corrosive products.
4) Check flipper units (tie rods, pads, contacts and coils). Replace coils when efficiency is poor.
5) Check bumpers (tie rods and pads).

ACCOUNTING - ADJUSTMENT - SELFDIAGNOSIS

45 tests as follows:

ACCOUNTING from test 1 to test 15

ADJUSTMENT from test 17 to test 40

SELFDIAGNOSIS from test 41 to test 45

Act on lever switch inside coin mech. door to enter the tests. Press UP button to go forwards, press DOWN button to go backwards.

TEST TABLE

ACCOUNTING

TEST	FUNCTION	DATA	DATA	BASIC PROGRAM
1	Coins inserted in left hand coin mech. 1 (left/contact 04)			—
2	Coins inserted in right hand coin mech. 2 (contact 05)			—
3	Coins inserted in middle coin mech. 3 (middle/contact 06)			—
4	Total plays (total games)			—
5	Total plays won(games won)			—
6	Total balls won (balls won)			—
7	Total Superbonus won (superbonus won)			—
8	Highest score (maximum score) Hi-score won			—
9	Winning score (score won)			—
10	Orange Special hit			—
11	Red Special hit			—
12	Tilts (play tilts)			—
13	Switching time (by minutes) (total time)			—
14	Operating time (by minutes) (game time)			—
15	Average play time (by minutes and seconds) (average)			—

All accounting tests (from 1 to 15) are set to zero one by one by acting as follows When on test to be set zero, press both LETTER SELECTION buttons located to the right hand of coin mech. door, and CREDIT button at the same time.

16	Basic program reset (setting - program default) see end table instructions

GAME ADJUSTMENT

TEST	FUCTION	DATA	DATA	BASIC PROGRAM
17	Highest Score selection (normal or random)			normal
18	Highest Score minimum			8.000.000
19	Coins for 1 credit in coin mech. 1 (left/contact 04)			2
20	Credits per coin in mech. 1 (left/contact 04)			1
21	Coins for 1 credit in coin mech. 2 (right/contact 05)			1
22	Credits per coin in coin mech. 2 (right/contact 05)			1
23	Coins for 1 credit in coin mech. 3 (middle/contact 06)			1
24	Credits per coin in coin mech. 3 (middle/contact 06)			2
25	Balls per play (from 1 to 7)			3
26	Match setting (yes match - no match)			yes match
27	1st winning score			3.000.000
28	2nd winning score			6.000.000
29	3rd winning score			8.000.000
30	Highest Score win (record) (1 replay, 2 replays, superb.no win)			2 replays
31	1st score win (replay, extra ball, superb., no win)			extra ball
32	2nd score win (replay, extra ball, superb., no win)			replay
33	3rd score win (replay, extra ball, superb., no win)			replay
34	Orange Special win (replay, extraball, superb., 1.000.000) no win			extra ball
35	Red Special win (replay, extra ball, superb., 1.500.000) no win			replay
36	Play automatic adjustment (self-adjust, no-adjust) ..... (see end table instructions)			self-adjust
37	Orange Special time (5 sec., 10 sec., 15 sec., 20 sec.)			15 sec.
38	Red Special time (5 sec., 10 sec., 15 sec., 20 sec.)			15 sec.
39	Enemies to be captured for the Special (from 1 to 5) Enemy			3
40	Advertising messages (spot) see end table instructions			

All game setting tests can be modified as follows:
when on test to be modified press FORW button of LETTER SELECTION and CREDIT button at the same time.

SELFDIAGNOSIS

45	RAM TEST	Press CREDIT button when on test 45. OK is displayed if RAM is good, FAULT if it is not.
44	DISPLAY TEST	Press CREDIT button when on test 44. Alphabet letters and numbers from 0 to 9 are displayed.
43	CONTACT TEST	Press CREDIT button when on test 43. Contact number and OFF/ON condition are displayed. Press CREDIT button again to check next contact.
42	LAMP TEST	Press CREDIT button when on test 42. Number of the lamp to be switched on is displayed. Press the button continuously for fast advance.
41	SOLENOID TEST	Press CREDIT button when on test 41. The number of solenoid to be temporary excited is displayed. Whne pressing FORW and CREDIT buttons at the same time excitement of same solenoid is repeated.

BASIC PROGRAM RESET (test 16)

Function of this test is to clear the whole RAM and reset the game automatically to basic program. Check last right hand column of test table to know how reset was made. Control above is required when RAM contains unusual data which do not correspond to test functions. It may occur when the machine is not operated for several weeks (8 at least) or battery recharge circuit is out of use.
Act as follows to operate on test 16: press both LETTER SELECTION buttons and CREDIT button at the same time, when on test 16. Then check game setting tests from 17 to 40 for possible changes of basic program.

AUTOMATIC GAME ADJUSTMENT (test 36)

Function of this test is to make the game easy or difficult depending on average time of each play. Test 36 acts on Orange and Red Special time, on right hand lateral canal closure time and ball rescue on left hand lateral canal.
Average time is 2 minutes per 3 balls play and 3,20 minutes per 5 balls play.
When for any reason longer or shorter average time is desired, set test 36 on NO ADJUST (automatic adjustment excluded).
Average time is to be calculated after 50 plays minimum. Automatic adjustment acts as above however average time different from time stated by automatic adjustment can appear on accounting after several games played due to game setting.
Average time per play can't be higher or lower than 50% of time set (2 minutes for 3 balls and 3,20 for 5 balls).

ADVERTISING MESSAGE (test 40)

Advertising message can be entered on 16 digits displays of X FORCE and models to come designed by Tecnoplay.
Operators can use theseadvertisements as desired by entering messages relating to their company, to the location on choise of its owner, and also contracts for advertising vending products can be made.
The message is displayed on the machine when in game over at 15 sec. intervals.
Act as follows to enter the message:
1) Press CREDIT button when on test 40. DISPLAY MESSAGE appears on first line, second line is clear. Othewise if INSERT LETTER or other wordings appear, move to test 39 or 41, then return on test 40. Now DISPLAY MESSAGE is displayed.
If no message was entered before, INSERT LETTER is displayed directly without passing through DISPLAY MESSAGE.
Press REWARD button of LETTER SELECTION 5 times minimum and last message entered appears from left hand to right hand any time REWARD button is pressed.
By presing FORW button the message moves back towards left hand. If a new message is not entered, move message towards left hand as originally.

2) Now enter a message further to the existing one. Press REWARD button untill letter of end message occupies the penultimate right hand digit (15) so that digit (16) is the next one.

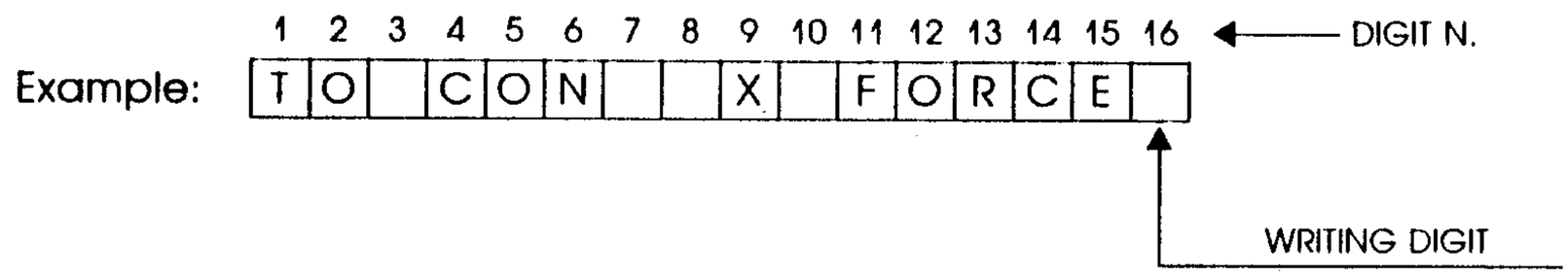

Now press CREDIT button. INSERT LETTER appears on first line and letter A on digit 16 starts flashing, which means that letters desired can be selected and entered by pressing CREDIT button.
Letters and numbers available:

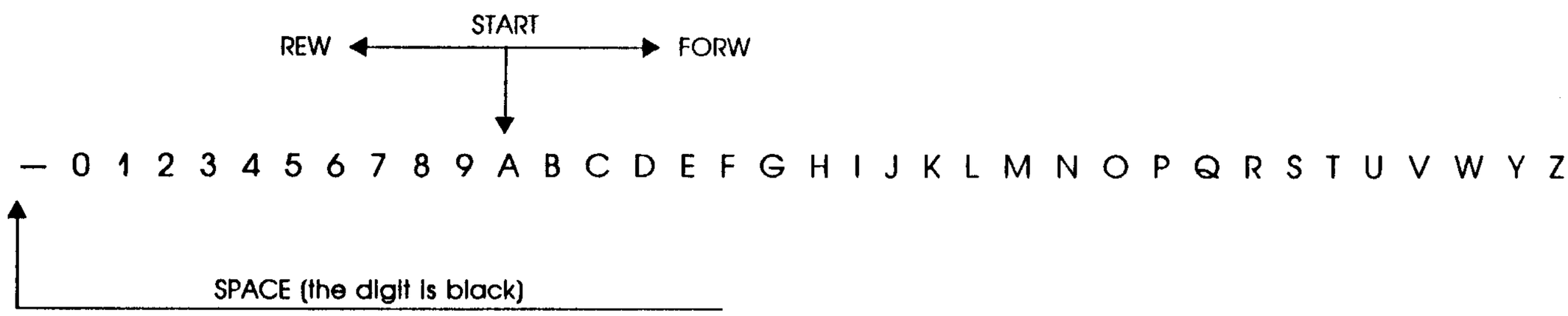

Insert 4 spaces before entering the message to separate it from previous one.
150 digits are available for one or more messages, spaces included.
Repeat operations 1 and 2 and bring first letter of first message on digit 16 then press REW button and CREDIT button at the same time to clear the old message and enter new one. When INSERT LETTER appearsprevious message is cleared and new one can be entered. If this is first message to be entered, press CREDIT button when on test 40 and INSERT LETTER appears. Select letters desired as above.
To review possible mistakes, when on DISPLAY MESSAGE bring wrong letter on digit 16, go in INSERT LETTER, select correct letter and enter it by pressing CREDIT button.

VINCITE DEL SUPERBONUS

La vincita di 1 superbonus corrisponde ad un premio speciale che può essere concesso mediante l'espulsione di 1 gettone. Applicando un distributore di gettoni a tubo con bobina (TOKEN DISPENSER) e collegandolo come da schema si avrà l'espulsione del gettone e la relativa registrazione in contabilità.

SCHEMA DI COLLEGAMENTO DEL DISTRIBUTORE DI GETTONI (TOKEN DISPENSER)

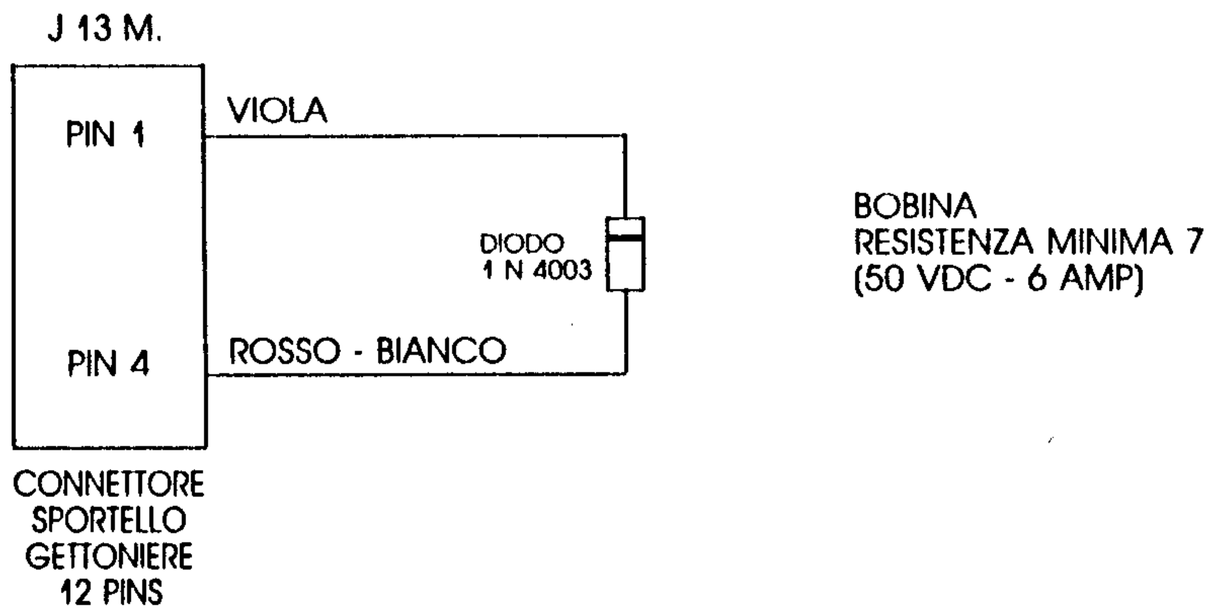

LISTA SOLENOIDI - SOLENOID TABLE

SOL. N°	DRIVER TRANS.	CONNECT. N°	PIN	FUNZIONE - FUNCTION	BOBINA - COIL	N° FUSE	VALORE/VALUE(2) OMEGA 6,3x32 T		VALORE/VALUE(2) OMEGA 6x30 T	
1	36 UP	CN 13	7	TIC-TOC	D-40 / S-1200	—	—		—	
2	37 UP	CN 13	6	TOKEN DISPENCER	—	—	—		—	
3	•38 UP	CN 11	7	LEFT CANAL KICKER	D-63 / S-1100	12	2,5 A	2 sec.	2,5 A	3 sec.
4	39 UP	CN 11	5	LEFT KICKER	D-40 / S-1200	5	2 A.	—	2 A.	—
5	40 UP	CN 11	4	RIGHT KICKER DOWN	D-40 / S-1200	5	2 A.	—	2 A.	—
6	41 UP	CN 13	1	LIGHT EFFECT FOR HEAD	STROBOSCOPIC LAMP (1)	—	—		—	
7	42 UP	CN 11	9	BARRIER RIGHT MOVING TARGET	D-45/S-1000/D-14/S-5000	11	2 A.	3 sec.	1,6 A.	3 sec.
8	43 UP	CN 11	6	BARRIER CENTER MOVING TARGET	D-45/S-1000/D-14/S-5000	13	2 A.	3 sec.	1,6 A.	3 sec.
9	45 UP	CN 11	2	BARRIER LEFT MOVING TARGET	D-45/S-1000/D-14/S-5000	14	2 A.	3 sec.	1,6 A.	3 sec.
10	44 UP	CN 12	9	LEFT BALL DRIVER	D-355 / S-1800	5	2 A.	—	2 A.	—
11	47 UP	CN 12	8	SPECIALS MOVING TARGET	D-45/S-1000/D-14/S-5000	10	2 A.	3 sec.	1,6 A.	3 sec.
12	46 UP	CN 12	6	BOTTOM BUMPER	D-45 / S-1000	6	1,6 A.	3 sec.	1,25 A.	3 sec.
13	49 UP	CN 12	5	BRIDGE EJECT	D-50 / S-1500	2	1,25 A.	2 sec.	1,25 A.	3 sec.
14	48 UP	CN 12	4	LEFT BUMPER	D-45 / S-1000	7	1,6 A.	3 sec.	1,25 A.	3 sec.
15	51 UP	CN 12	3	TOP BUMPER	D-45 / S-1000	4	1,6 A.	3 sec.	1,25 A.	3 sec.
16	•50 UP	CN 12	2	CHOPPER EJECT	D-63 / S-1100	3	2,5 A.	2 sec.	2,5 A.	3 sec.
17	36 DW	CN 16	7	HORIZONTAL KICKER - TOP LEFT	D-40 / S-1200	5	2 A.	—	2 A.	—
18	37 DW	CN 16	6	HORIZONTAL KICKER - TOP RIGHT	D-40 / S-1200	5	2 A.	—	2 A.	—
19	38 DW	CN 14	7	MOVING MINI POST - RIGHT CANAL	D-45/S-1000/D-14/S-5000	1	2 A.	3 sec.	1,6 A.	3 sec.
20	39 DW	CN 14	5	FLIPPER RELAY	RELAY 2 SC 10 A. 48 DC	—	—	—	—	—
21	43 DW	CN 14	6	PLAYFIELD EFFECT LAMP (3 LAMP SERIAL)	LAMP BA 15 - 12 V. 10 W.	—	—	—	—	—
22	42 DW	CN 14	9	RIGHT KICKER UP	D-40 / S-1200	5	2 A.	—	2 A.	—
23	41 DW	CN 14	3	OUT HOLE KICKER	D-40 / S-1200	5	2 A.	—	2 A.	—
24	40 DW	CN 14	4	HOLE EJECT	D-355 / S-1800	5	2 A.	—	2 A.	—
25	45 DW	CN 14	2	LAMP - LEFT KICKER DOWN	LAMP BA 15 - 12 V. 25 W.	—	—	—	—	—
26	44 DW	CN 15	9	LAMP - RIGHT KICKER	LAMP BA 15 - 12 V. 25 W.	—	—	—	—	—
27	47 DW	CN 15	8	LAMP - LEFT ROLLOWER	LAMP BA 15 - 12 V. 25 W.	—	—	—	—	—
28	46 DW	CN 15	6	LAMP - RIGHT KICKER TOP	LAMP BA 15 - 12 V. 25 W.	—	—	—	—	—
29	•49 DW	CN 15	5	LAMPS - EFFECT PLAYFIELD/HEAD (3 lamps parall.)	LAMP BA 15 - 12 V. 10 W.	—	—	—	—	—
30	48 DW	CN 15	4	LAMP - BOTTOM BUMPER	LAMP BA 15 - 12 V. 25 W.	—	—	—	—	—
31	51 DW	CN 15	3	LAMP. TOP BUMPER	LAMP BA 15 - 12 V. 25 W.	—	—	—	—	—
32	50 DW	CN 15	2	LAMP - LEFT BUMPER	LAMP BA 15 - 12 V. 25 W.	—	—	—	—	—

— TUTTI I TRANSISTORS (DARLINGTON) SONO BDX 33 B SOSTITUIBILI CON BDX 33 C or BD 649
ALL TRANSISTOR ARE BDX 33 B INTERCAMBIABLE WITH BDX33C or BD 649

— • = DEVE ESSERE MONTATO CON DISSIPATORE DI CALORE - MUST BE WITH HEAT SINK

— (1) OPTIONAL

— (2) I VALORI DEI FUSIBILI ED I TEMPI DI FUSIONE SONO PER FUSIBILI TIPO «OMEGA-T»
THE VALUES AND THE INTERRUCTION TIME ARE FOR FUSES «OMEGA -T»

POSIZIONE CONNETTORI/CONNECTORS LOCATION

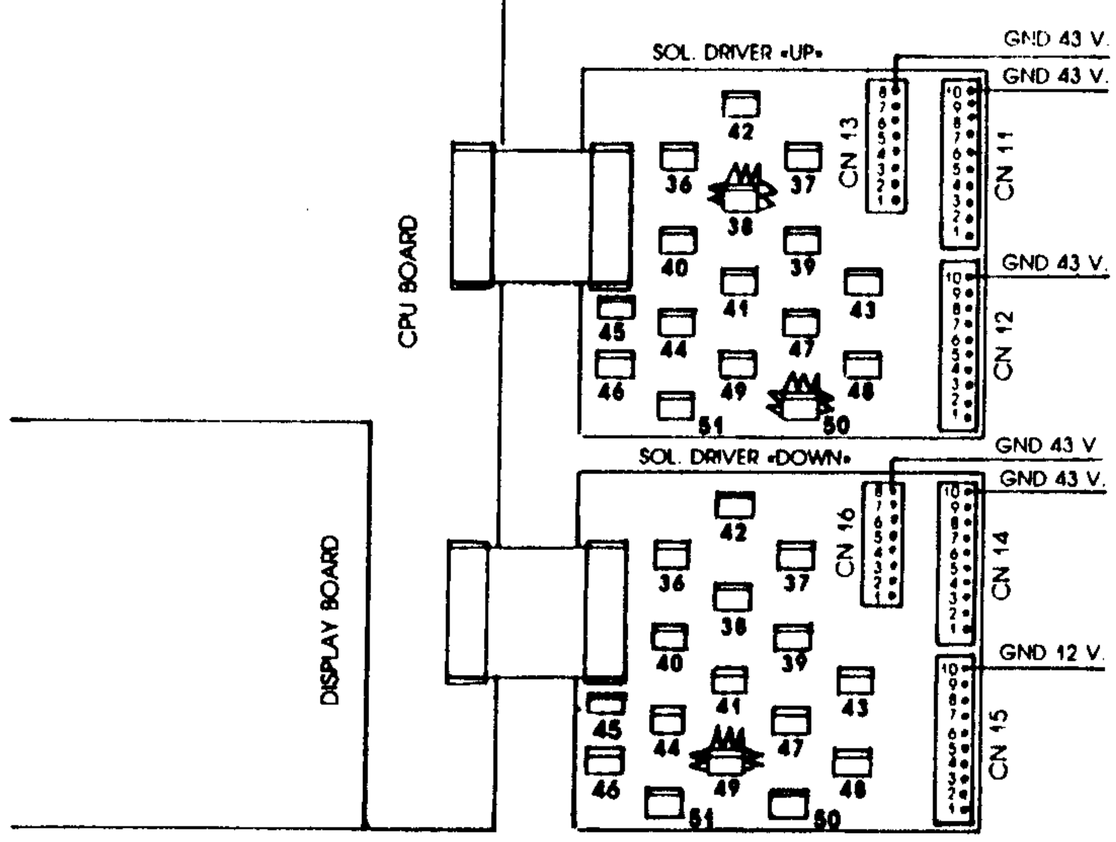

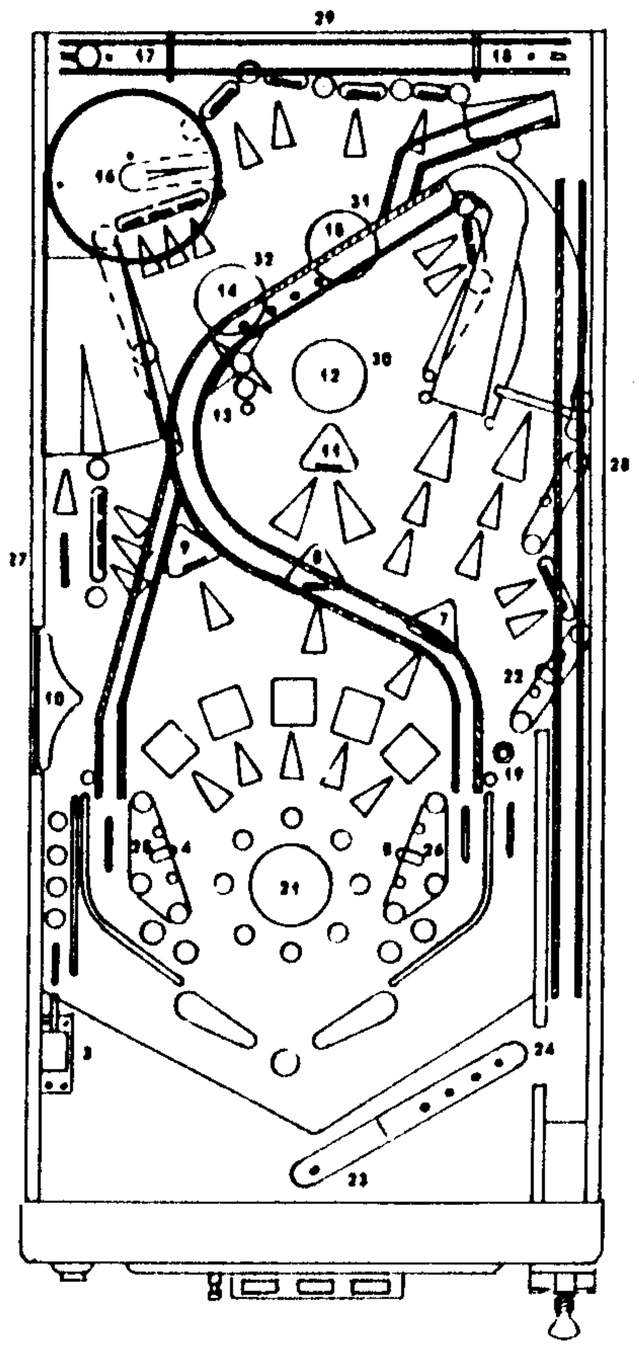

MATRICE LAMPADE - LAMPS MATRIX «X FORCE»

CONNETTORE CN 6 5 6 7 8 9 10 11 12

N° COL. → 1 2 3 4 5 6 7 8

6,3V. 0,3A.

1N4003

CONNECTOR CN5	N° RIGA		NERO-B	MARR-B	ROSSO-B	ARAN-B	GIALLO-B	VERDE-B	BLU-B	VIOLA-B
4	1	NERO	BONUS MULTIP. x 40 1	BONUS MULTIP. x 20 2	BONUS MULTIP. x 10 3	BONUS MULTIP. x 5 4	EXIT LEFT CANAL 1 5	EXIT LEFT CANAL 2 6	EXIT LEFT CANAL 3 7	EXIT LEFT CANAL 4 8
5	2	MARR	BONUS 7 9	BONUS 8 10	BONUS 1 11	BONUS 2 12	BONUS 3 13	BONUS 4 14	BONUS 5 15	BONUS 6 16
6	3	ROSSO	EXTRA BALL 17	ARROW ENEMY 1 18	ARROW ENEMY 2 19	ARROW ENEMY 3 20	ARROW ENNEMY 4 21	ARROW ENEMY 5 22	BARRIER 1st TARGET 23	BARRIER 2nd TARGET 24
7	4	ARANCIO	BARRIER 3rd TARGET 25	FIX TARGET RIGHT (Bottom) 26	FIX TARGET RIGHT (Top) 27	SPINNING TARGET (Bottom) 28	SPINNING TARGET (Middle) 29	SPINNING TARGET (Top) 30	BRIDGE RAMP (Bottom) 31	BRIDGE RAMP (Middle) 32
8	5	GIALLO	BRIDGE RAMP (Top) 33	RED SPECIAL 34	ORANGE SPECIAL 35	FIX TARGET LEFT (Bottom) 36	FIX TARGET LEFT (Middle) 37	FIX TARGET LEFT (Top) 38	LEFT ROLLOVER 39	FIX TARGET TOP (Left) 40
9	6	VERDE	FIX TARGET TOP (Middle) 41	FIX TARGET TOP (Right) 42	FIX TARGET RIGHT (Bottom) 43	FIX TARGET RIGHT (Top) 44	FIX TARGET TOP (Right) 45	FIX TARGET TOP (Middle-right) 46	5000 PTS HORIZONTAL RAIL 47	20000 PTS HORIZONTAL RAIL 48
10	7	BLU	NOT USED 49	FIX TARGET TOP (Middle-left) 50	FIX TARGET TOP (Left) 51	80000 PTS HORIZONTAL RAIL 52	80000 PTS HORIZONTAL RAIL 53	20000 PTS HORIZONTAL RAIL 54	5000PTS HORIZONTAL RAIL 55	NOT USED 56
11	8	VIOLA	CHOPPER EFFECT 57	CHOPPER EFFECT 58	CHOPPER EFFECT 59	ENNEMY 1 60	ENNEMY 2 61	ENNEMY 3 62	ENNEMY 4 63	ENNEMY 5 64

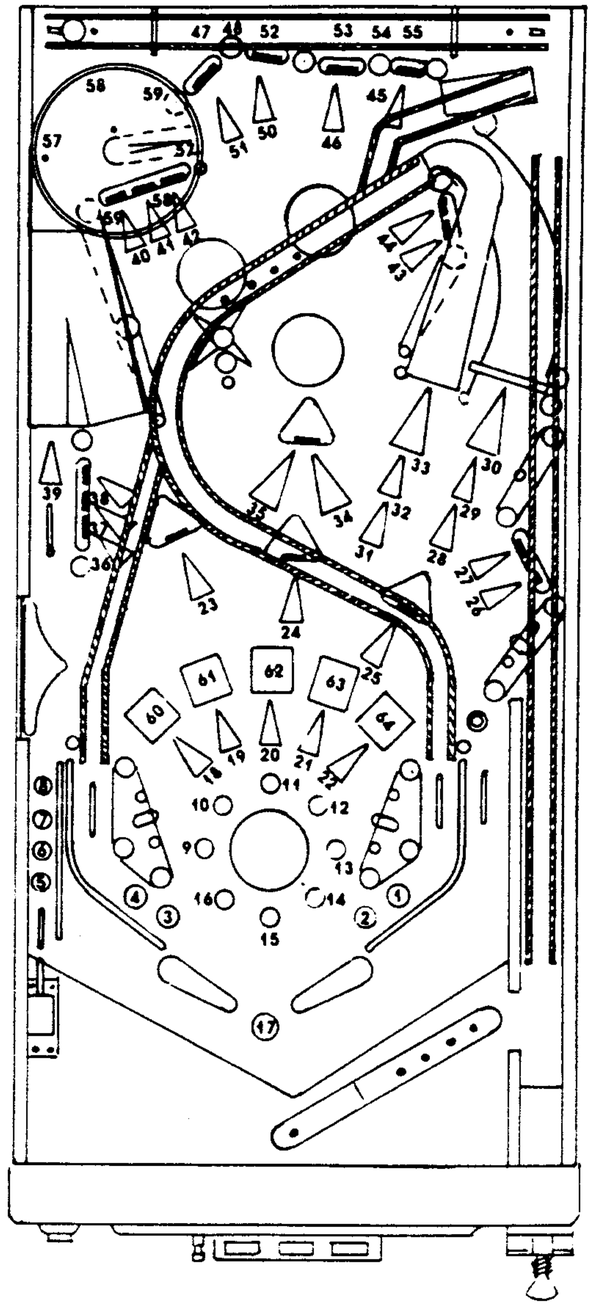

MATRICE CONTATTI - SWITCH MATRIX «X FORCE»

CONNETTORE CN 3	1	8	7	6	5	4	3	2

CONNECTOR CN3

N° COL. → Ø 1 2 3 4 5 6 7

N° RIGA ↓ 1N4148

		NERO.B	MARR.B	ROSSO.B	ARAN.B	GIALLO.B	VERDE.B	BLU.B	VIOLA.B
18	Ø NERO Ø TEST UP	TEST DOWN 1	TILT 2 (vertical lead) 2	SERVICE 3	COIN SW 1 LEFT 4	COIN SW 2 RIGHT 5	COIN SW 3 MIDDLE 6	LETTER SELECTION FORW. 7
17	1 MARR. 8 LETTER SELECTION REW.	CREDIT 9	TILT 1 (horizontality ball and pendulum) 10	NOT USED 11	MINI POST 12	NOT USED 13	HORIZONTAL RAIL RIGHT 14	FIX TOP TARGET (right) 15
16	2 ROSSO 16 OUT HOLE	4th BALL 17	3rd BALL 18	2nd BALL 19	1st BALL 20	EXIT CANAL RIGHT 21	INNER CANAL LEFT 22	NOT USED 23
15	3 ARANCIO 24 NOT USED	INNER CANAL RIGHT 25	EXIT CANAL LEFT 26	LEFT KICKER 27	RIGHT KICKER 28	TOP RIGHT KICKER 29	BOTTOM BUMPER 30	TOP BUMPER 31
14	4 GIALLO 32 LEFT BUMPER	BARRIER 3 TARGET 33	NOT USED 34	BARRIER 2 TARGET 35	NOT USED 36	BARRIER 1 TARGET 37	LEFT ROLLOVER 38	FIX LEFT TARGET (bottom) 39
13	5 VERDE 40 FIX LEFT TARGET (center)	FIX LEFT TARGET (top) 41	NOT USED 42	SPECIALS TARGET 43	FIXED CONTACT 44	SPINNING TARGET 45	FIX RIGHT TARGET (middle-top) 46	FIX RIGHT TARGET (top) 47
12	6 BLU 48 FIX RIGHT TARGET (bottom)	FIX RIGHT TARGET (middle-bottom) 49	NOT USED 50	4th BALL BRIDGE 51	3rd BALL BRIDGE 52	2nd BALL BRIDGE 53	1st BALL BRIDGE 54	FIX TOP LEFT TARGET (left) 55
11	7 VIOLA 56 FIX TOP LEFT TARGET (middle)	FIX TOP LEFT TARGET (right) 57	CHOPPER ENTRY 58	CHOPPER EXIT 59	HORIZONTAL RAIL LEFT 60	FIX TOP TARGET (left) 61	FIX TOP TARGET (middle-left) 62	FIX TOP TARGET (middle-right) 63

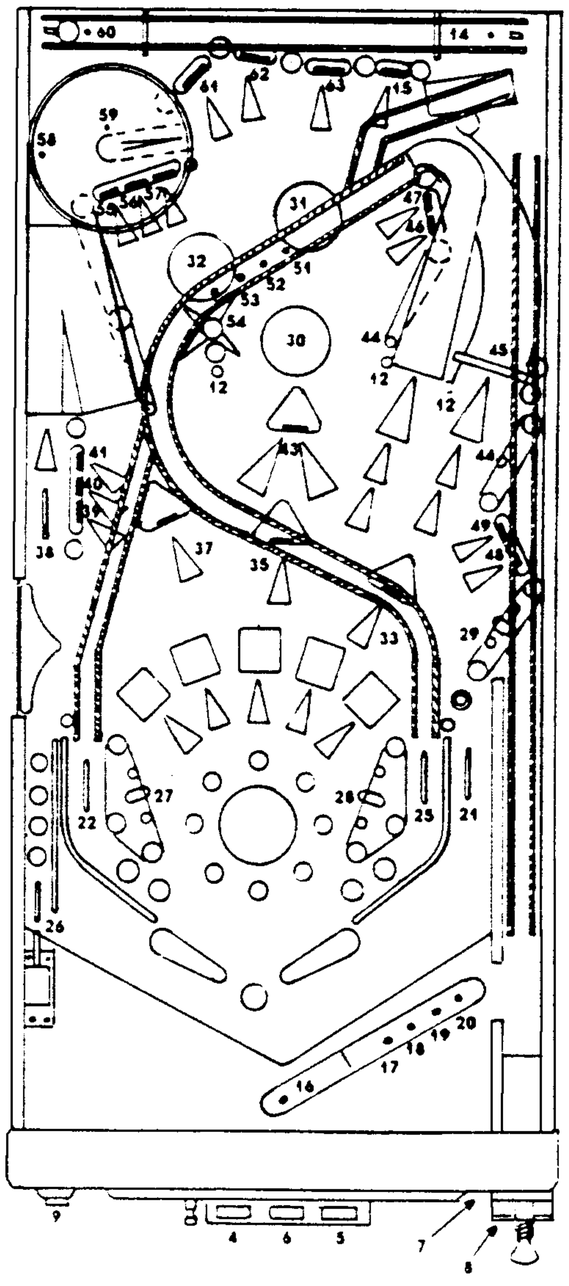

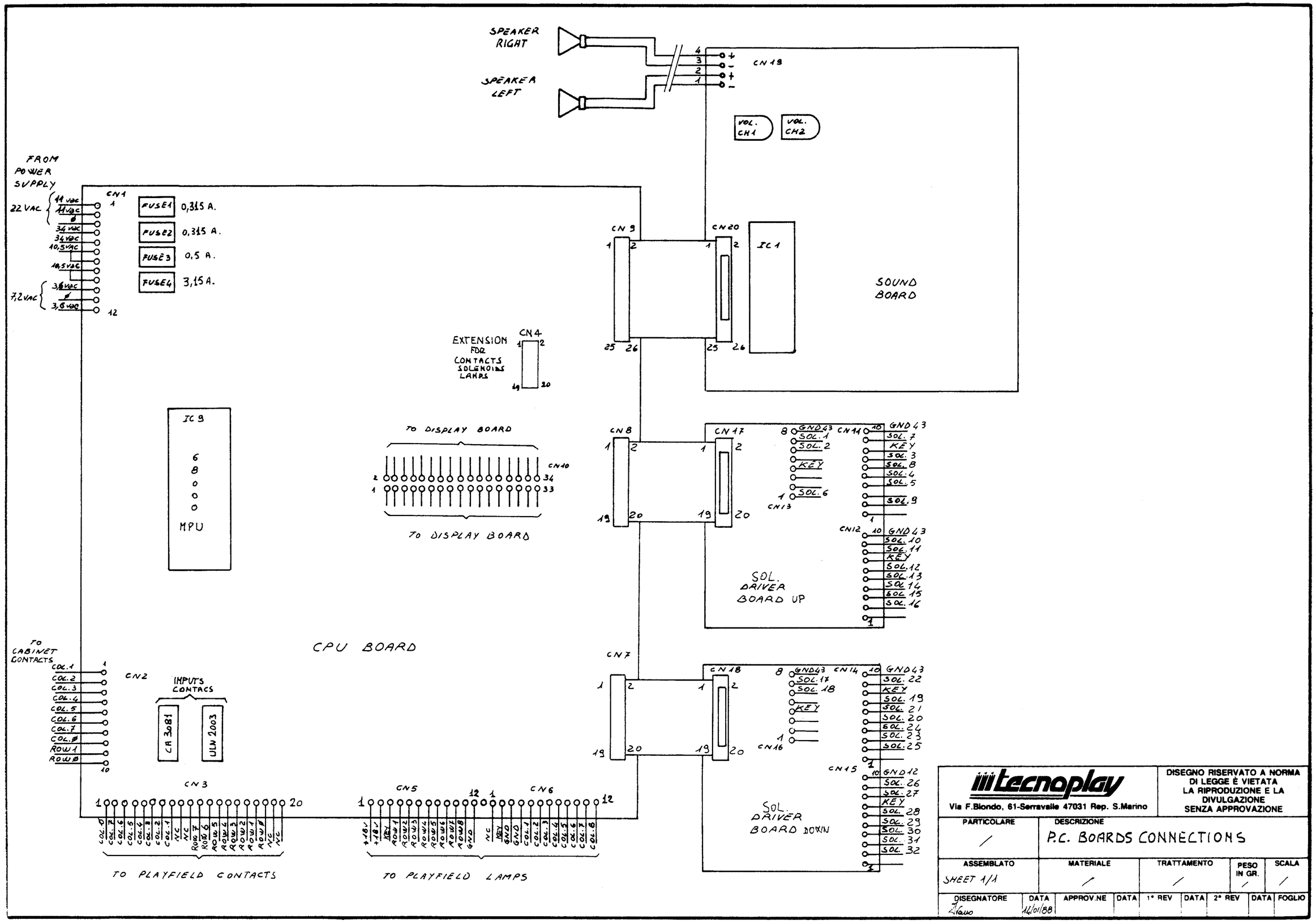
SPEAKER RIGHT
SPEAKER LEFT
CN 19
VOL. CH1
VOL. CH2
FROM POWER SUPPLY
CN1
22 VAC
11 VAC
11 VAC
36 VAC
34 VAC
10,5 VAC
10,5 VAC
7,2 VAC
3,6 VAC
3,6 VAC
FUSE1 0,315 A.
FUSE2 0,315 A.
FUSE3 0,5 A.
FUSE4 3,15 A.
CN 9
CN20
IC 1
SOUND BOARD
EXTENSION FOR CONTACTS SOLENOIDS LAMPS
CN4
IC 9
MPU
TO DISPLAY BOARD
CN10
CN8
CN17
CN13
CN11
CN12
SOL. DRIVER BOARD UP
CN7
CN18
CN16
CN14
CN15
SOL. DRIVER BOARD DOWN
TO CABINET CONTACTS
CN2
INPUTS CONTACS
CA 3081
ULN 2003
CPU BOARD
CN3
CN5
CN6
TO PLAYFIELD CONTACTS
TO PLAYFIELD LAMPS
tecnoplay
Via F.Biondo, 61-Serravalle 47031 Rep. S.Marino
DISEGNO RISERVATO A NORMA DI LEGGE È VIETATA LA RIPRODUZIONE E LA DIVULGAZIONE SENZA APPROVAZIONE
PARTICOLARE
DESCRIZIONE
P.C. BOARDS CONNECTIONS
ASSEMBLATO
SHEET 1/1
MATERIALE
TRATTAMENTO
PESO IN GR.
SCALA
DISEGNATORE
DATA 14/01/88
APPROV.NE
DATA
1° REV
DATA
2° REV
DATA
FOGLIO

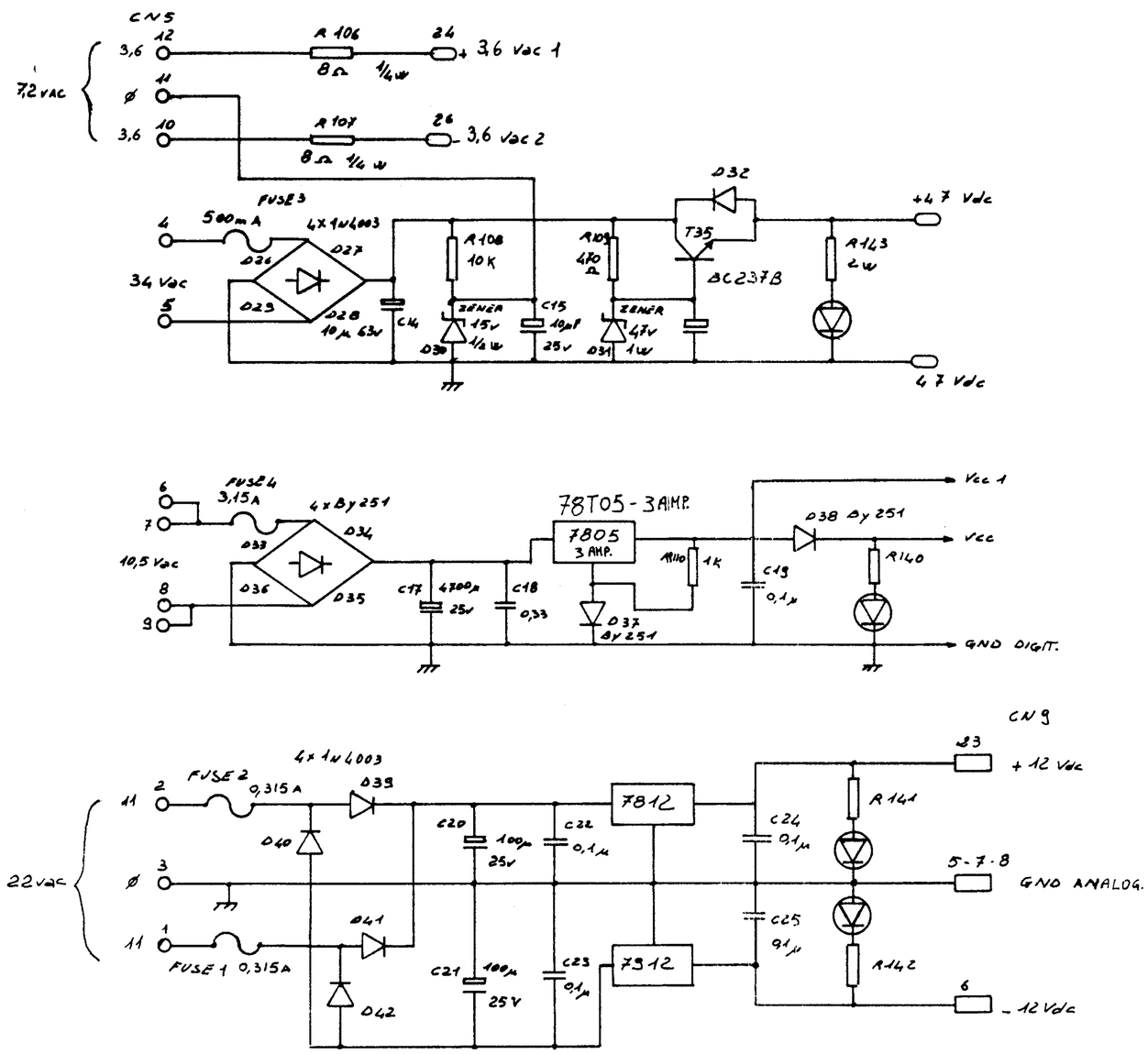

tecnoplay Via F.Biondo, 61-Serravalle 47031 Rep. S.Marino							DISEGNO RISERVATO A NORMA DI LEGGE È VIETATA LA RIPRODUZIONE E LA DIVULGAZIONE SENZA APPROVAZIONE	
PARTICOLARE /		DESCRIZIONE CPU BOARD - POWER SECTION						
ASSEMBLATO SHEET 1/4		MATERIALE /		TRATTAMENTO /		PESO IN GR. /	SCALA /	
DISEGNATORE Ferrari	DATA 11/01/88	APPROV.NE	DATA	1° REV	DATA	2° REV	DATA	FOGLIO

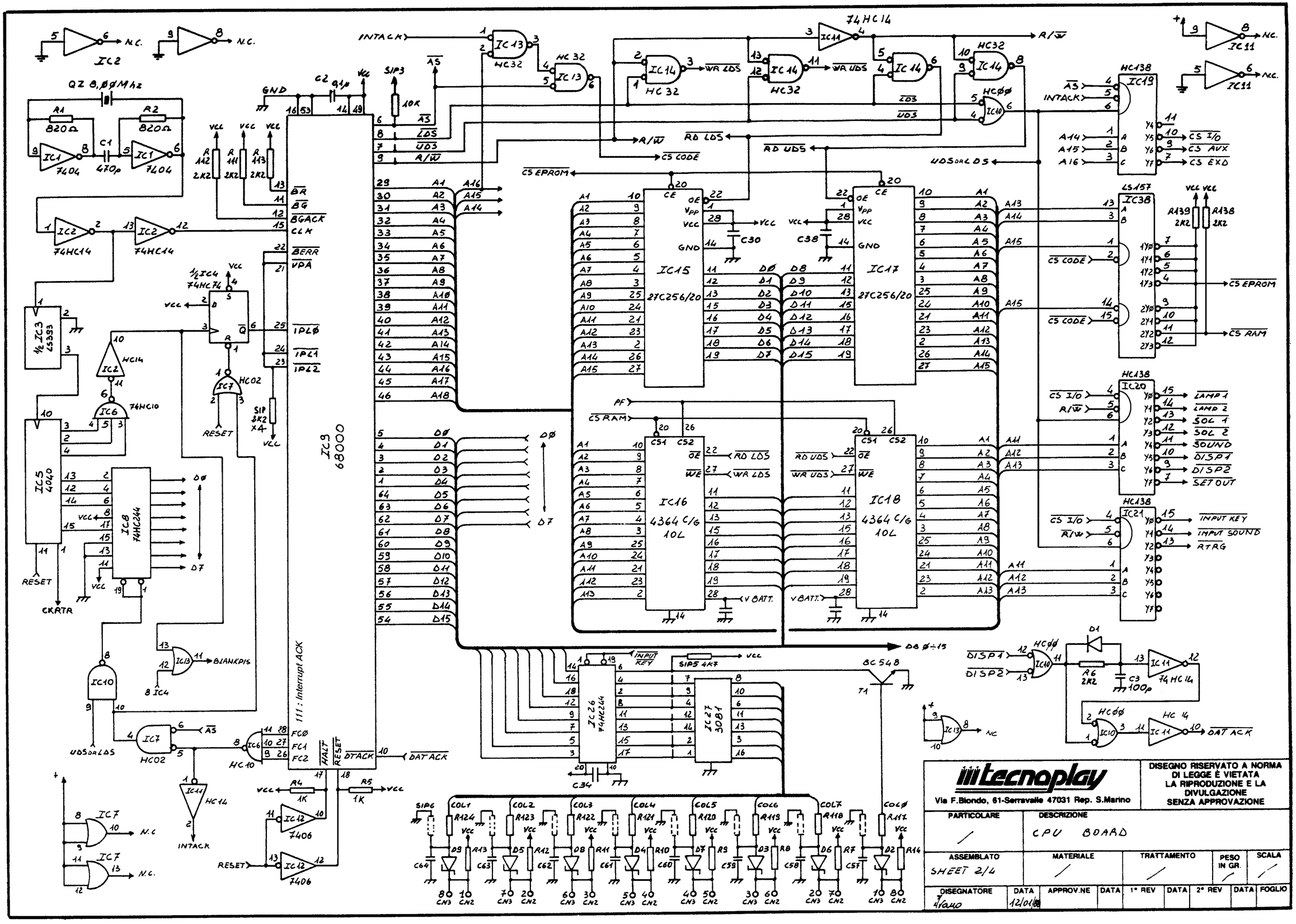

tecnoplay
Via F.Biondo, 61-Serravalle 47031 Rep. S.Marino

DISEGNO RISERVATO A NORMA DI LEGGE È VIETATA LA RIPRODUZIONE E LA DIVULGAZIONE SENZA APPROVAZIONE

PARTICOLARE	DESCRIZIONE				
/	CPU BOARD				
ASSEMBLATO	MATERIALE	TRATTAMENTO	PESO IN GR.	SCALA	
SHEET 2/4	/	/	/	/	

DISEGNATORE	DATA	APPROV.NE	DATA	1° REV	DATA	2° REV	DATA	FOGLIO
4/rauo	12/01/88							

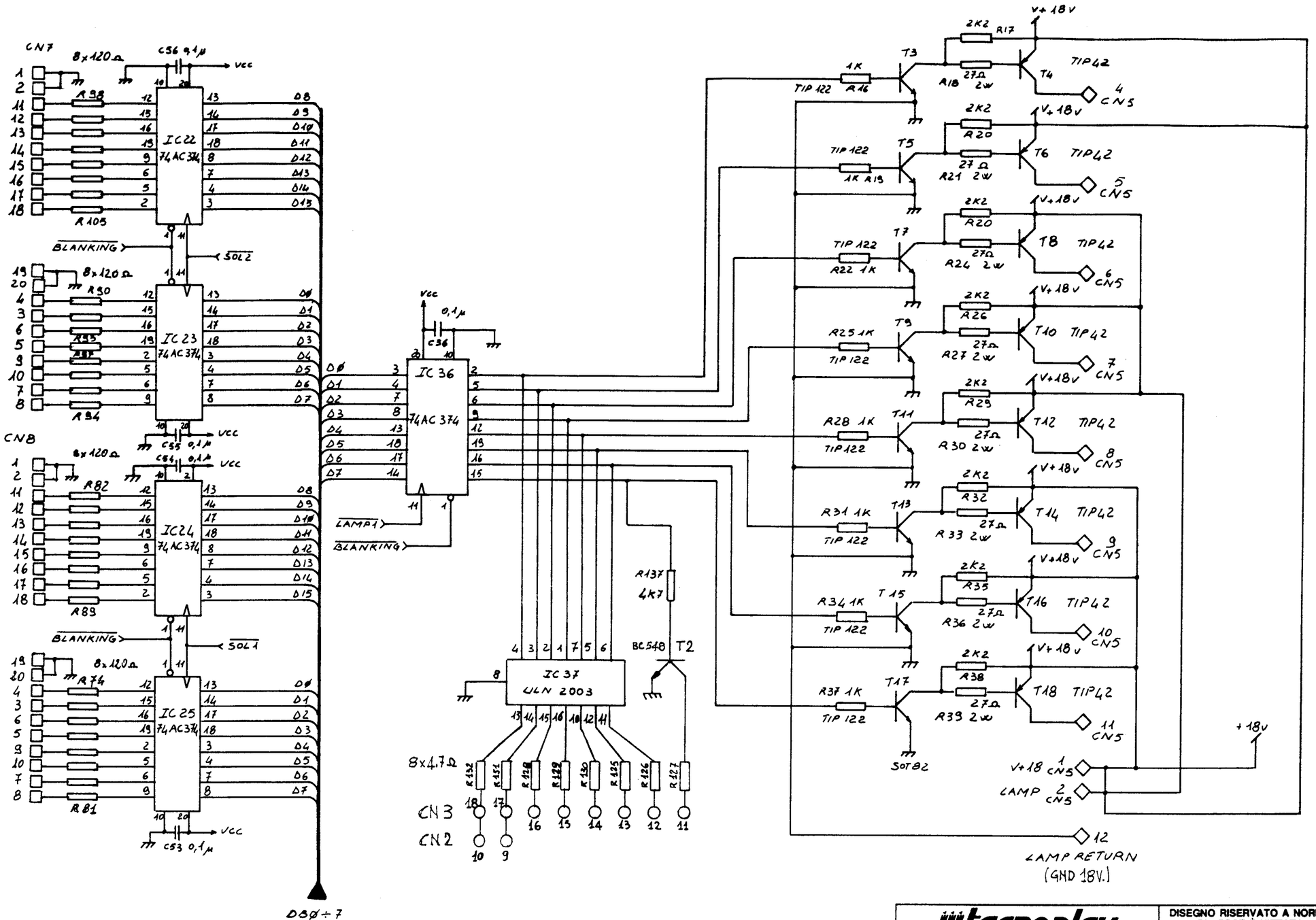

tecnoplay
Via F.Biondo, 61-Serravalle 47031 Rep. S.Marino

DISEGNO RISERVATO A NORMA DI LEGGE È VIETATA LA RIPRODUZIONE E LA DIVULGAZIONE SENZA APPROVAZIONE

PARTICOLARE	DESCRIZIONE			
/	CPU BOARD			
ASSEMBLATO	MATERIALE	TRATTAMENTO	PESO IN GR.	SCALA
SHEET 3/4	/	/	/	/

DISEGNATORE	DATA	APPROV.NE	DATA	1° REV	DATA	2° REV	DATA	FOGLIO
Flavio	12/01/88							

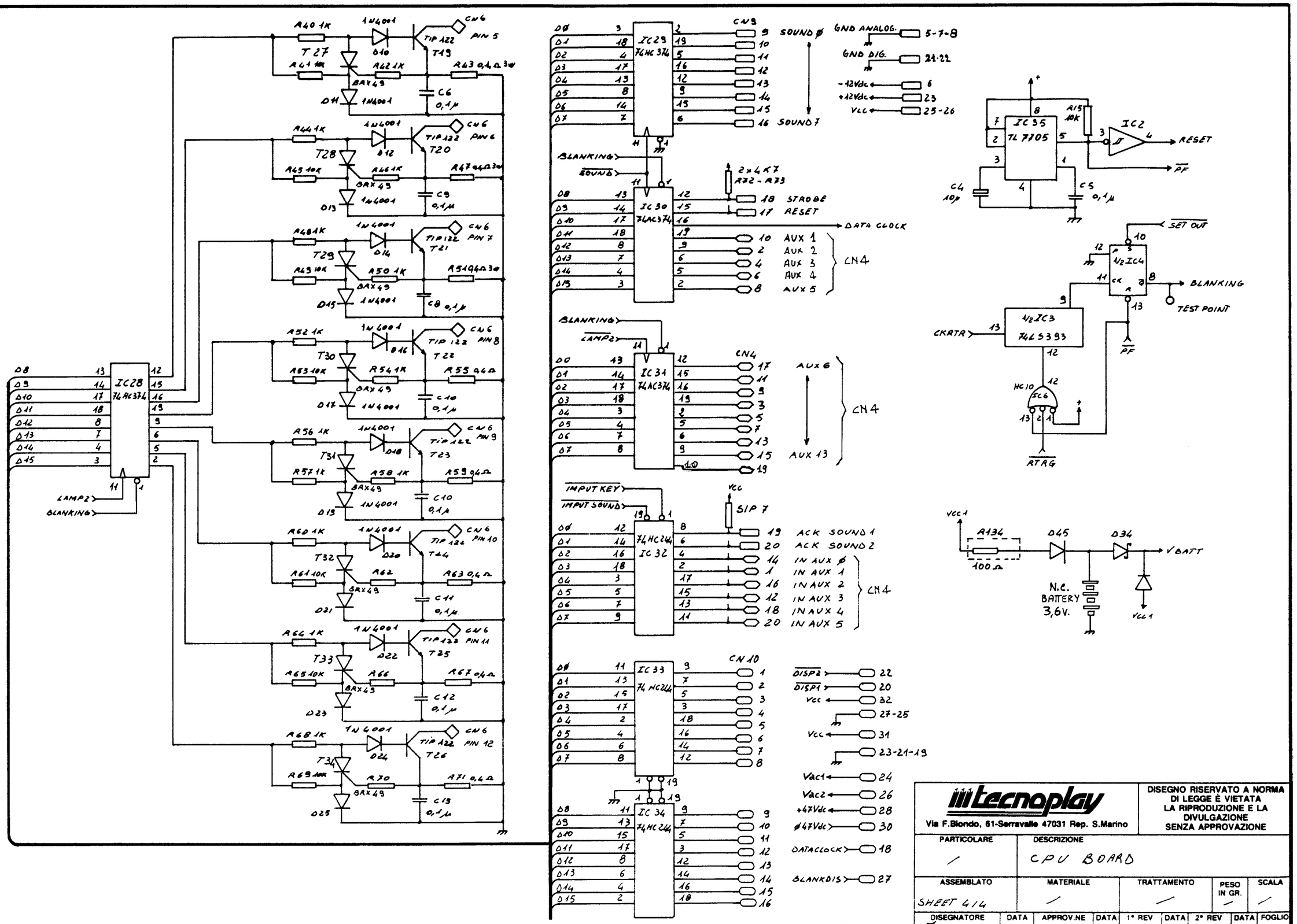
IC28 74HC374
IC29 74HC374
IC30 74AC374
IC31 74AC374
IC32 74HC244
IC33 74HC244
IC34 74HC244
IC35 TL7705
TIP 122
BAX49
1N4001
CN6
CN4
CN10
SIP 7
LAMP2
BLANKING
SOUND
SOUND 0
SOUND 7
GND ANALOG.
GND DIG.
-12Vdc
+12Vdc
VCC
STROBE
RESET
DATA CLOCK
AUX 1
AUX 2
AUX 3
AUX 4
AUX 5
AUX 6
AUX 13
IMPUT KEY
IMPUT SOUND
ACK SOUND 1
ACK SOUND 2
IN AUX 0
IN AUX 1
IN AUX 2
IN AUX 3
IN AUX 4
IN AUX 5
DISP2
DISP1
Vac1
Vac2
+47Vdc
-47Vdc
DATACLOCK
BLANKDIS
SET OUT
TEST POINT
CKATR
RTRG
PF
VBATT
N.C. BATTERY 3,6V.
tecnoplay
Via F.Biondo, 61-Serravalle 47031 Rep. S.Marino
DISEGNO RISERVATO A NORMA DI LEGGE È VIETATA LA RIPRODUZIONE E LA DIVULGAZIONE SENZA APPROVAZIONE
PARTICOLARE
DESCRIZIONE
CPU BOARD
ASSEMBLATO
SHEET 4/4
MATERIALE
TRATTAMENTO
PESO IN GR.
SCALA
DISEGNATORE
DATA
13/01/88
APPROV.NE
1° REV
2° REV
FOGLIO

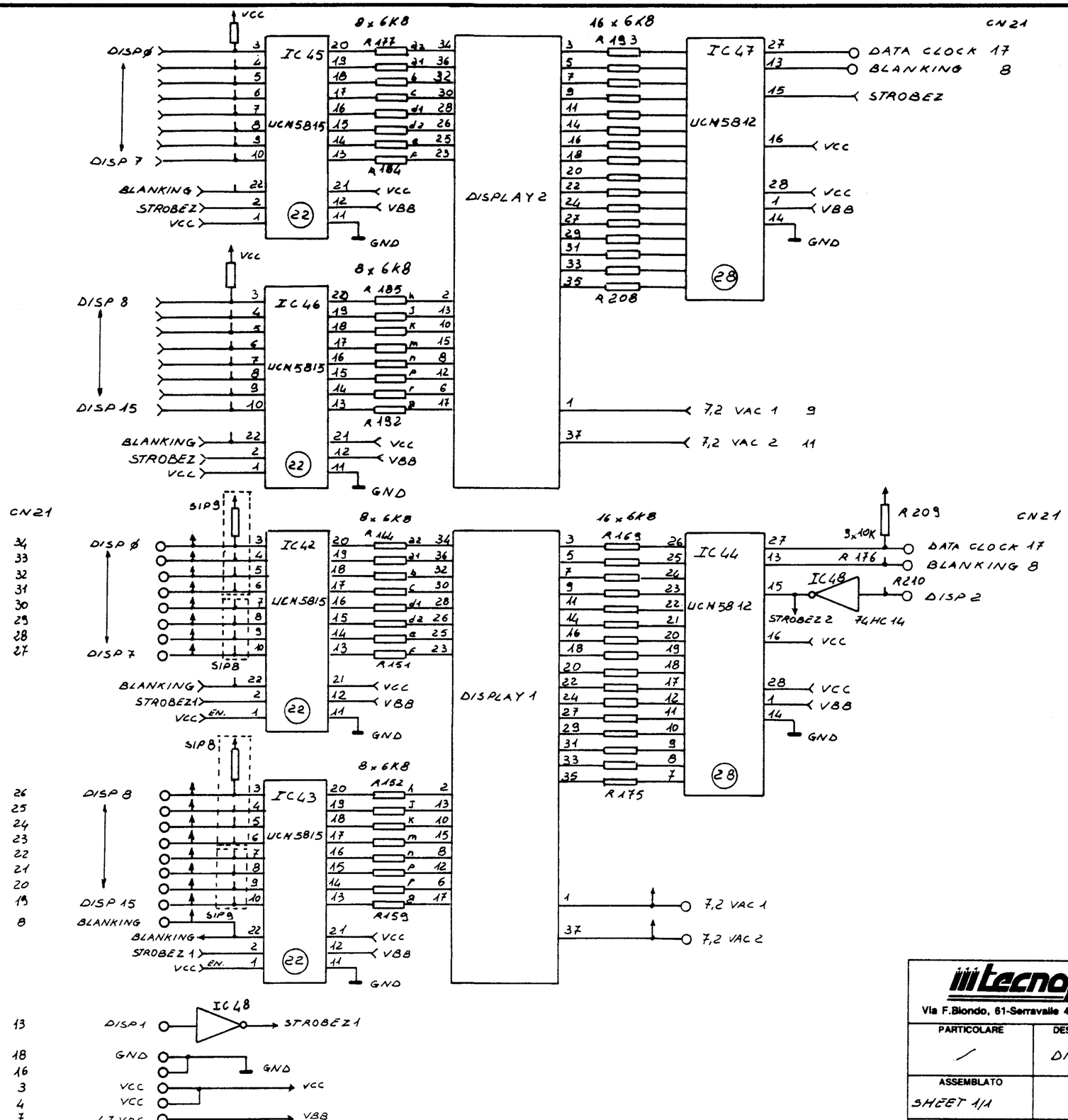

tecnoplay Via F.Biondo, 61-Serravalle 47031 Rep. S.Marino							DISEGNO RISERVATO A NORMA DI LEGGE È VIETATA LA RIPRODUZIONE E LA DIVULGAZIONE SENZA APPROVAZIONE	
PARTICOLARE	DESCRIZIONE							
/	DISPLAY BOARD							
ASSEMBLATO	MATERIALE		TRATTAMENTO			PESO IN GR.	SCALA	
SHEET 1/1	/		/			/	/	
DISEGNATORE	DATA	APPROV.NE	DATA	1° REV	DATA	2° REV	DATA	FOGLIO
[illegible]	16/01/88							

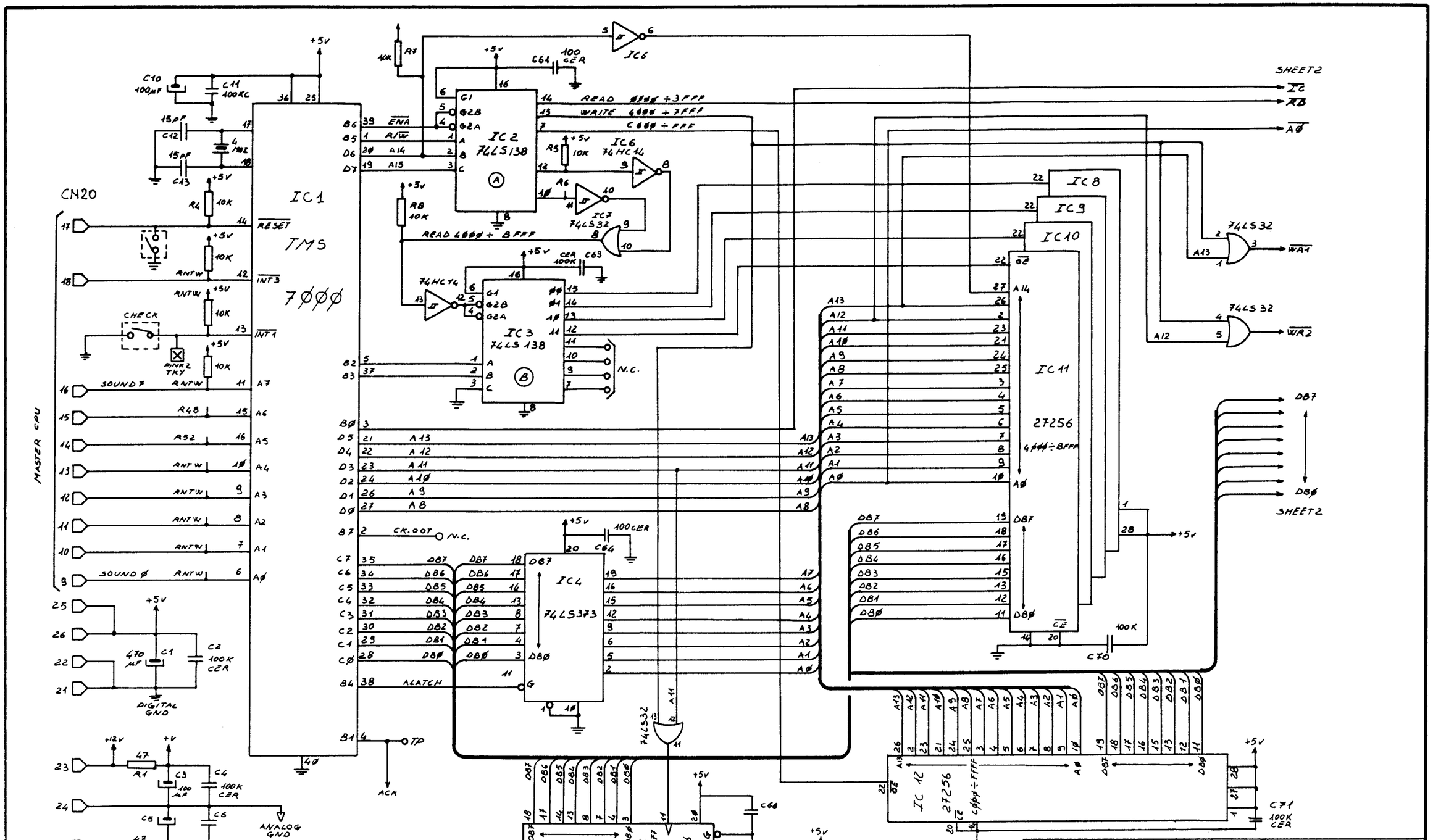

tecnoplay
Via F.Biondo, 61-Serravalle 47031 Rep. S.Marino

DISEGNO RISERVATO A NORMA DI LEGGE È VIETATA LA RIPRODUZIONE E LA DIVULGAZIONE SENZA APPROVAZIONE

PARTICOLARE	DESCRIZIONE			
/	SOUND BOARD			
ASSEMBLATO	MATERIALE	TRATTAMENTO	PESO IN GR.	SCALA
SHEET 1/2	/	/	/	/

DISEGNATORE	DATA	APPROV.NE	DATA	1° REV	DATA	2° REV	DATA	FOGLIO
[illegible]	10/01/88							

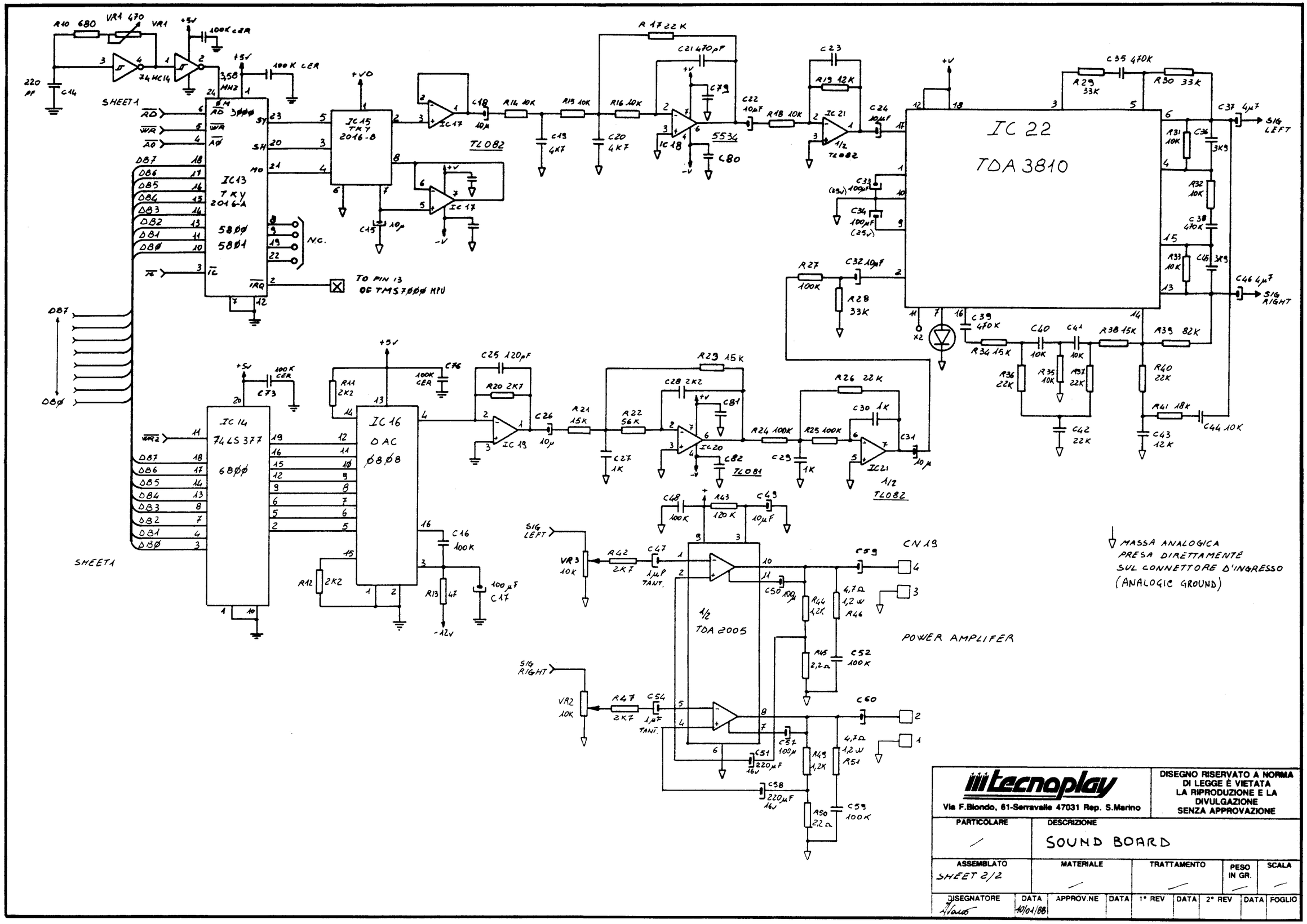
IC 22
TDA 3810
IC13
TMY
2016-A
IC15
TMY
2016-B
IC14
74LS377
IC16
DAC
0808
TL082
5534
TL081
TDA 2005
SHEET 1
SHEET 1
TO PIN 13
OF TMS7000 MPU
N.C.
SIG LEFT
SIG RIGHT
CN 19
POWER AMPLIFER
MASSA ANALOGICA
PRESA DIRETTAMENTE
SUL CONNETTORE D'INGRESSO
(ANALOGIC GROUND)
tecnoplay
Via F.Biondo, 61-Serravalle 47031 Rep. S.Marino
DISEGNO RISERVATO A NORMA DI LEGGE È VIETATA LA RIPRODUZIONE E LA DIVULGAZIONE SENZA APPROVAZIONE
PARTICOLARE
DESCRIZIONE
SOUND BOARD
ASSEMBLATO
SHEET 2/2
MATERIALE
TRATTAMENTO
PESO IN GR.
SCALA
DISEGNATORE
DATA
10/01/88
APPROV.NE
DATA
1° REV
DATA
2° REV
DATA
FOGLIO

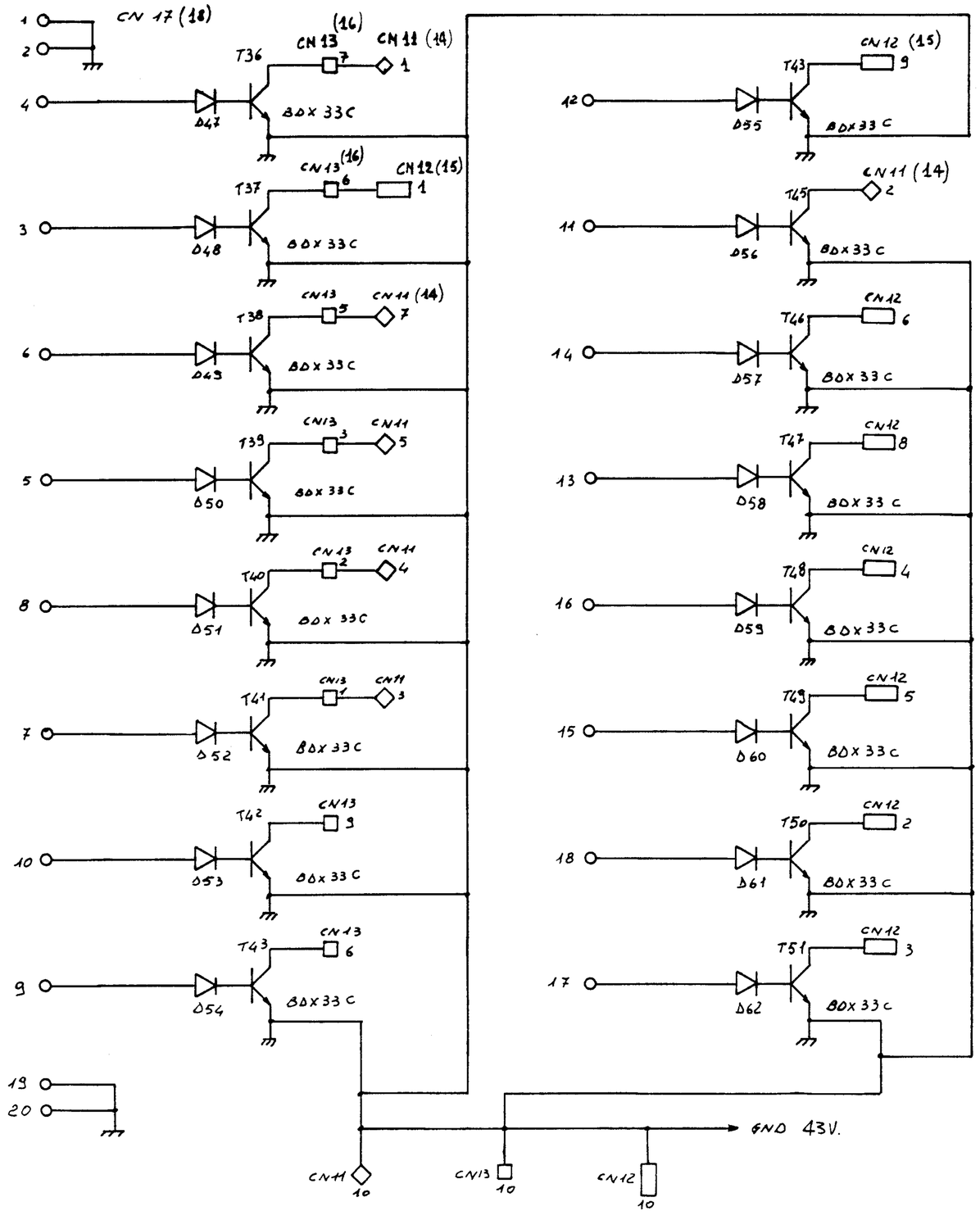

tecnoplay
Via F.Biondo, 61-Serravalle 47031 Rep. S.Marino

DISEGNO RISERVATO A NORMA DI LEGGE È VIETATA LA RIPRODUZIONE E LA DIVULGAZIONE SENZA APPROVAZIONE

PARTICOLARE	DESCRIZIONE				
/	DRIVER BOARD				
ASSEMBLATO	MATERIALE	TRATTAMENTO	PESO IN GR.	SCALA	
SHEET 1/1	/	/	/	/	
DISEGNATORE	DATA	APPROV.NE	DATA	1° REV	DATA	2° REV	DATA	FOGLIO
Flavio	12/01/00							

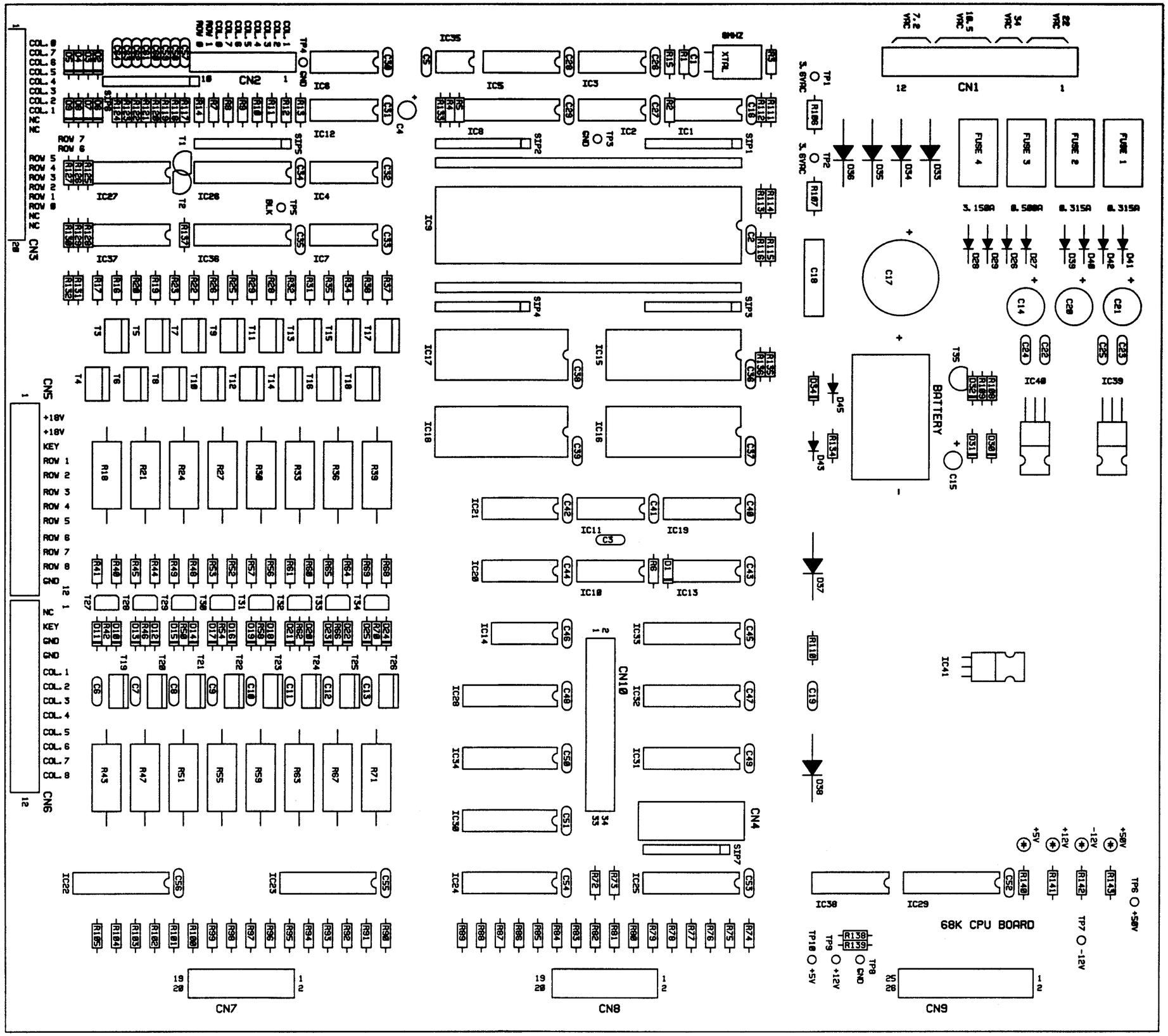
68K CPU BOARD
CN1
CN2
CN3
CN4
CN5
CN6
CN7
CN8
CN9
CN10
BATTERY
FUSE 1
FUSE 2
FUSE 3
FUSE 4
0.315A
0.315A
0.500A
3.150A
XTAL
2MHZ
+5V
-12V
+12V
+50V
TP6 +50V
TP7 -12V
TP8 GND
TP9 +12V
TP10 +5V
TP1 3.6VDC
TP2 3.6VDC
TP3 GND
TP4 GND
TP5 BLK
22 VDC
54 VDC
18.5 VDC
7.2 VDC
+18V
+18V
KEY
ROW 1
ROW 2
ROW 3
ROW 4
ROW 5
ROW 6
ROW 7
ROW 8
GND
NC
KEY
GND
GND
COL. 1
COL. 2
COL. 3
COL. 4
COL. 5
COL. 6
COL. 7
COL. 8

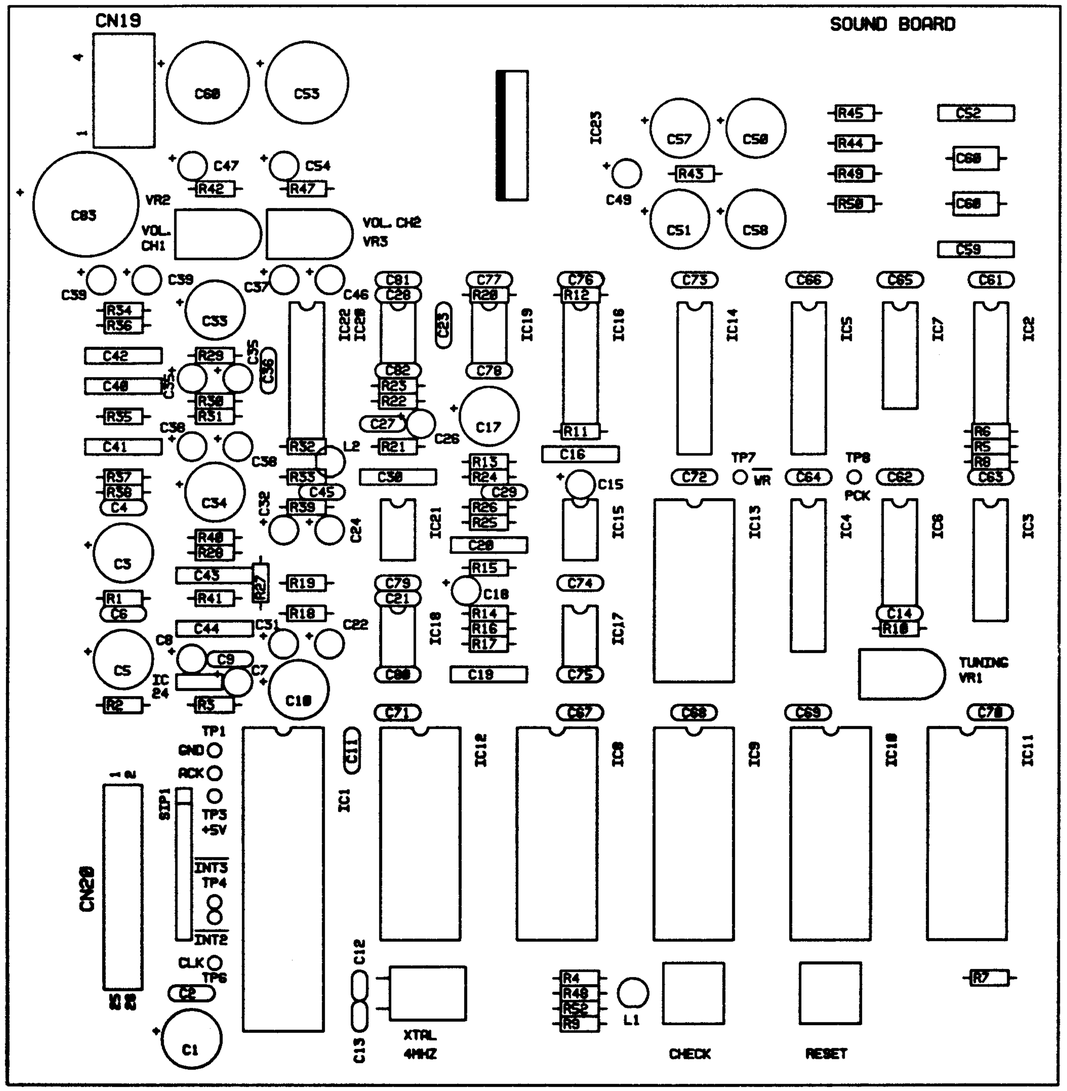
SOUND BOARD
CN19
CN20
VR2
VOL. CH1
VOL. CH2
VR3
TUNING
VR1
TP1
GND
RCK
TP3
+5V
INT3
TP4
INT2
CLK
TP6
SIP1
TP7
WR
TP8
PCK
XTAL
4MHZ
CHECK
RESET

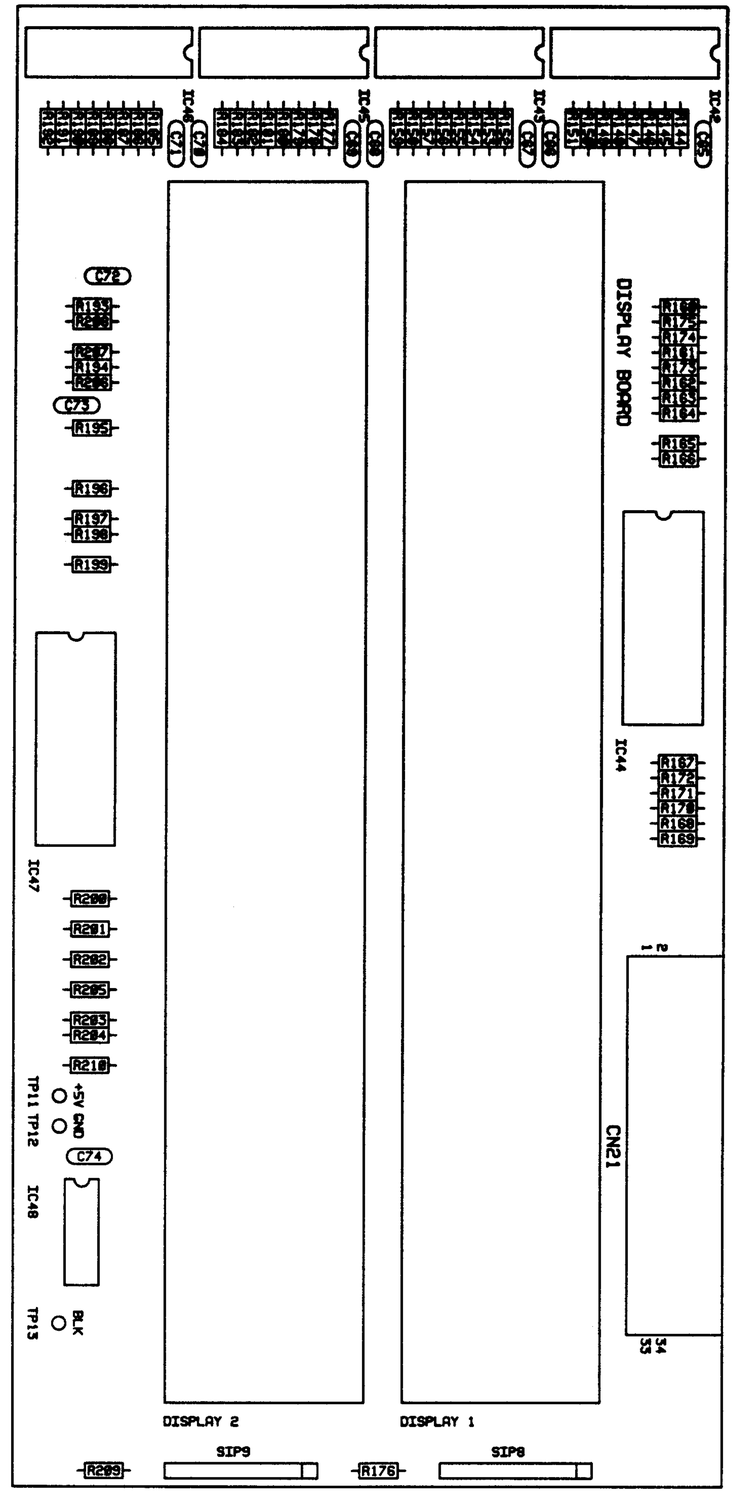
DISPLAY BOARD
CN21
DISPLAY 2
DISPLAY 1
SIP9
SIP8
TP11
TP12
+5V
GND
TP13
BLK

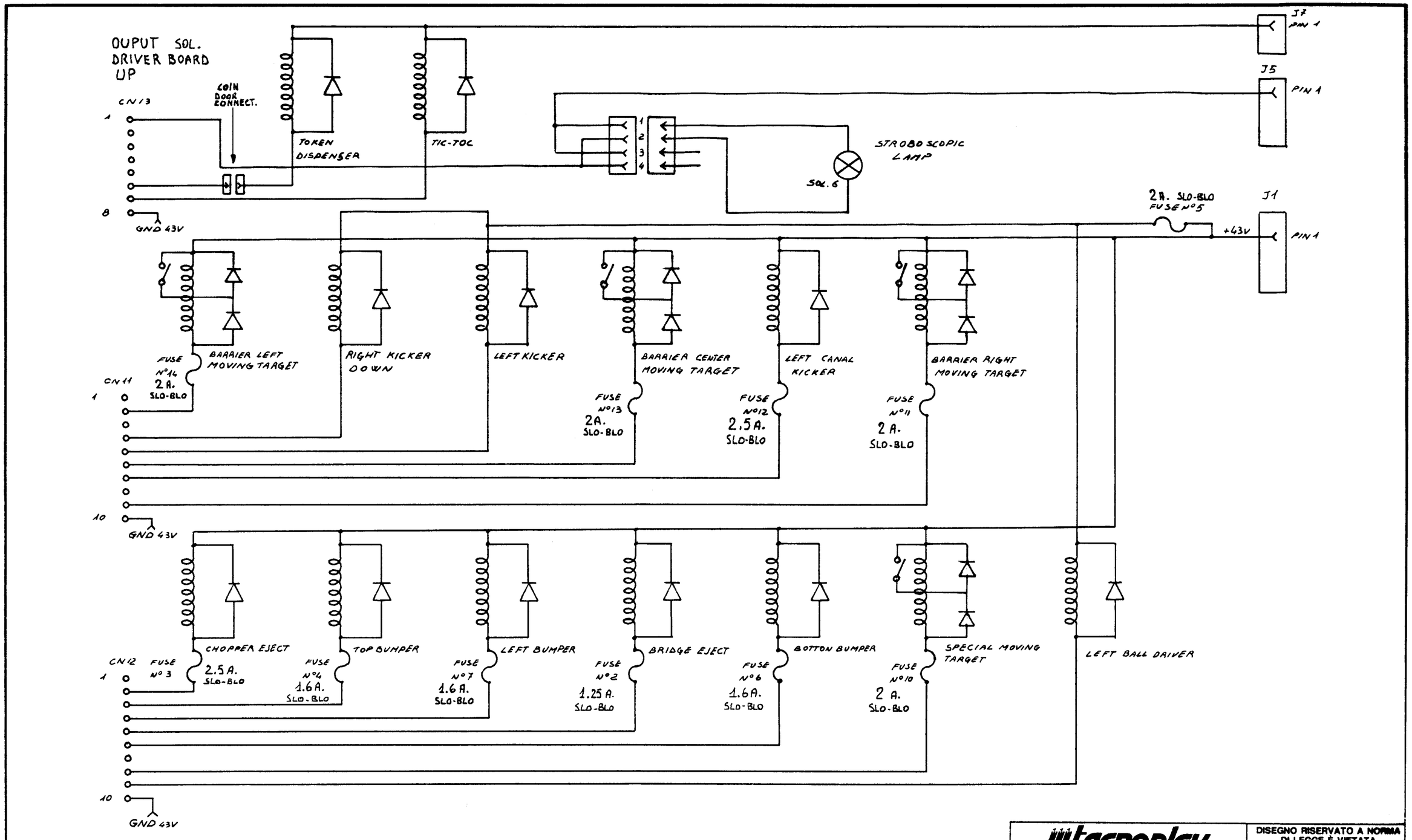

tecnoplay Via F.Biondo, 61-Serravalle 47031 Rep. S.Marino				DISEGNO RISERVATO A NORMA DI LEGGE È VIETATA LA RIPRODUZIONE E LA DIVULGAZIONE SENZA APPROVAZIONE				
PARTICOLARE	DESCRIZIONE							
/	SOLENOID WIRING							
ASSEMBLATO	MATERIALE		TRATTAMENTO		PESO IN GR.	SCALA		
	/		/		/	/		
DISEGNATORE	DATA	APPROV.NE	DATA	1° REV	DATA	2° REV	DATA	FOGLIO
	16/01/88							

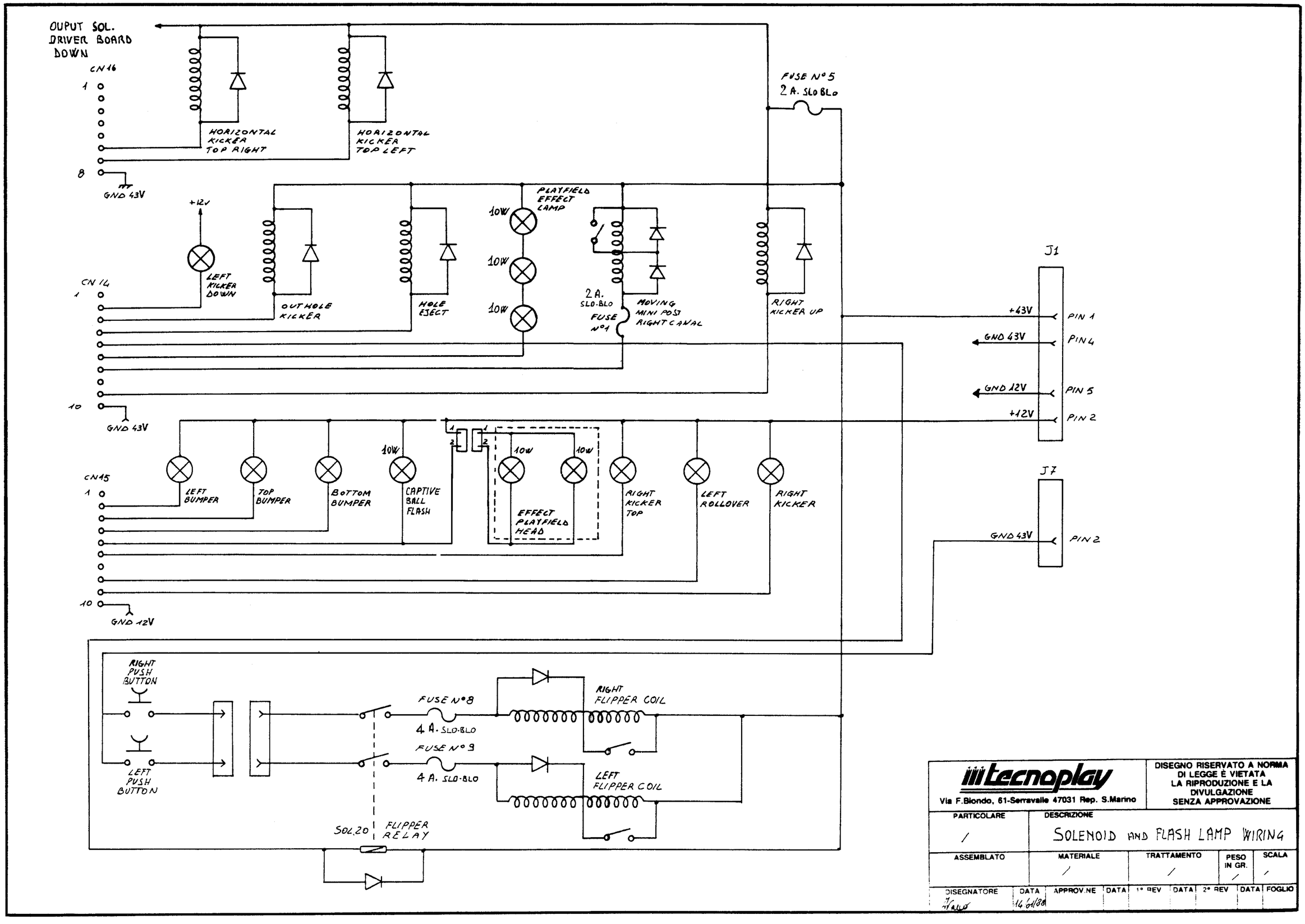

tecnoplay
Via F.Biondo, 61-Serravalle 47031 Rep. S.Marino

DISEGNO RISERVATO A NORMA DI LEGGE È VIETATA LA RIPRODUZIONE E LA DIVULGAZIONE SENZA APPROVAZIONE

PARTICOLARE	DESCRIZIONE			
/	SOLENOID AND FLASH LAMP WIRING			
ASSEMBLATO	MATERIALE	TRATTAMENTO	PESO IN GR.	SCALA
	/	/	/	/

DISEGNATORE	DATA	APPROV.NE	DATA	1° REV	DATA	2° REV	DATA	FOGLIO
	14/01/88							

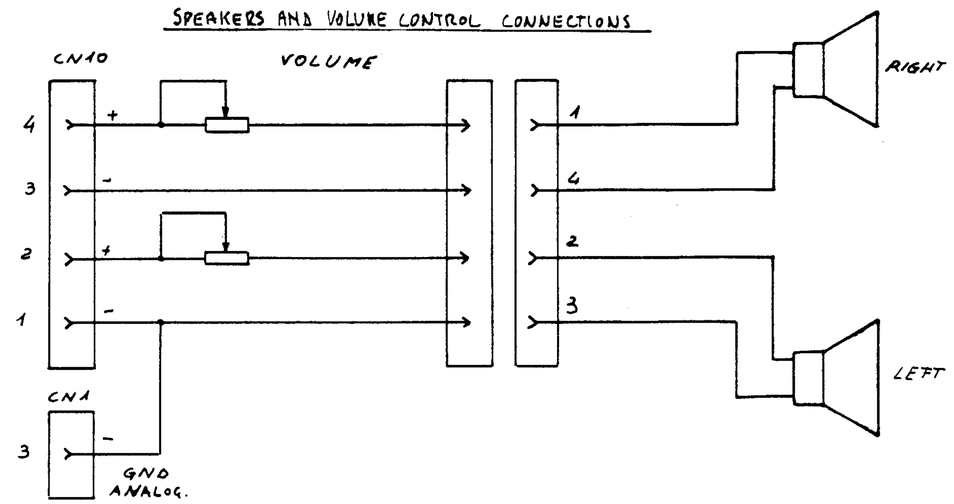

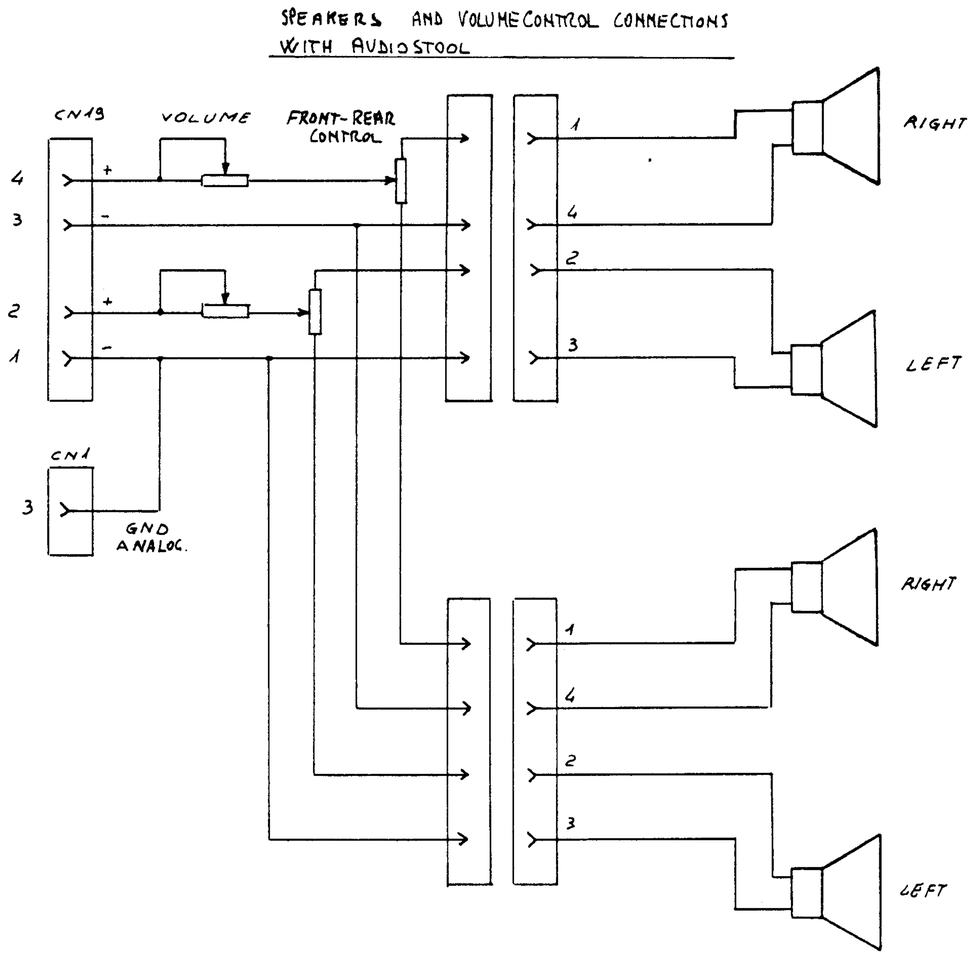

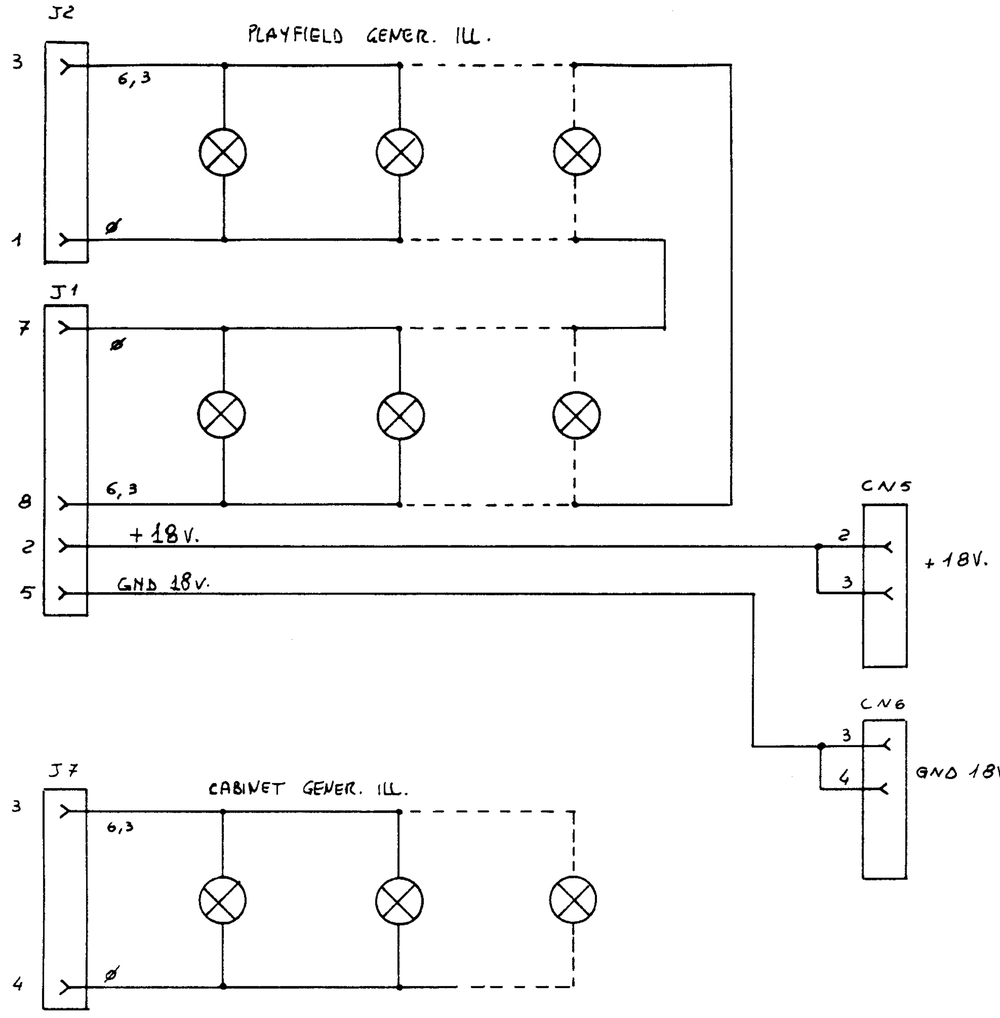

tecnoplay
Via F.Biondo, 61-Serravalle 47031 Rep. S.Marino

DISEGNO RISERVATO A NORMA DI LEGGE È VIETATA LA RIPRODUZIONE E LA DIVULGAZIONE SENZA APPROVAZIONE

PARTICOLARE	DESCRIZIONE			
/	SPEAKERS AND GEN. ILL. WIRING			
ASSEMBLATO	MATERIALE	TRATTAMENTO	PESO IN GR.	SCALA
SHEET 1/1	/	/	/	/

DISEGNATORE	DATA	APPROV.NE	DATA	1° REV	DATA	2° REV	DATA	FOGLIO
Zigulo	16/07/89							

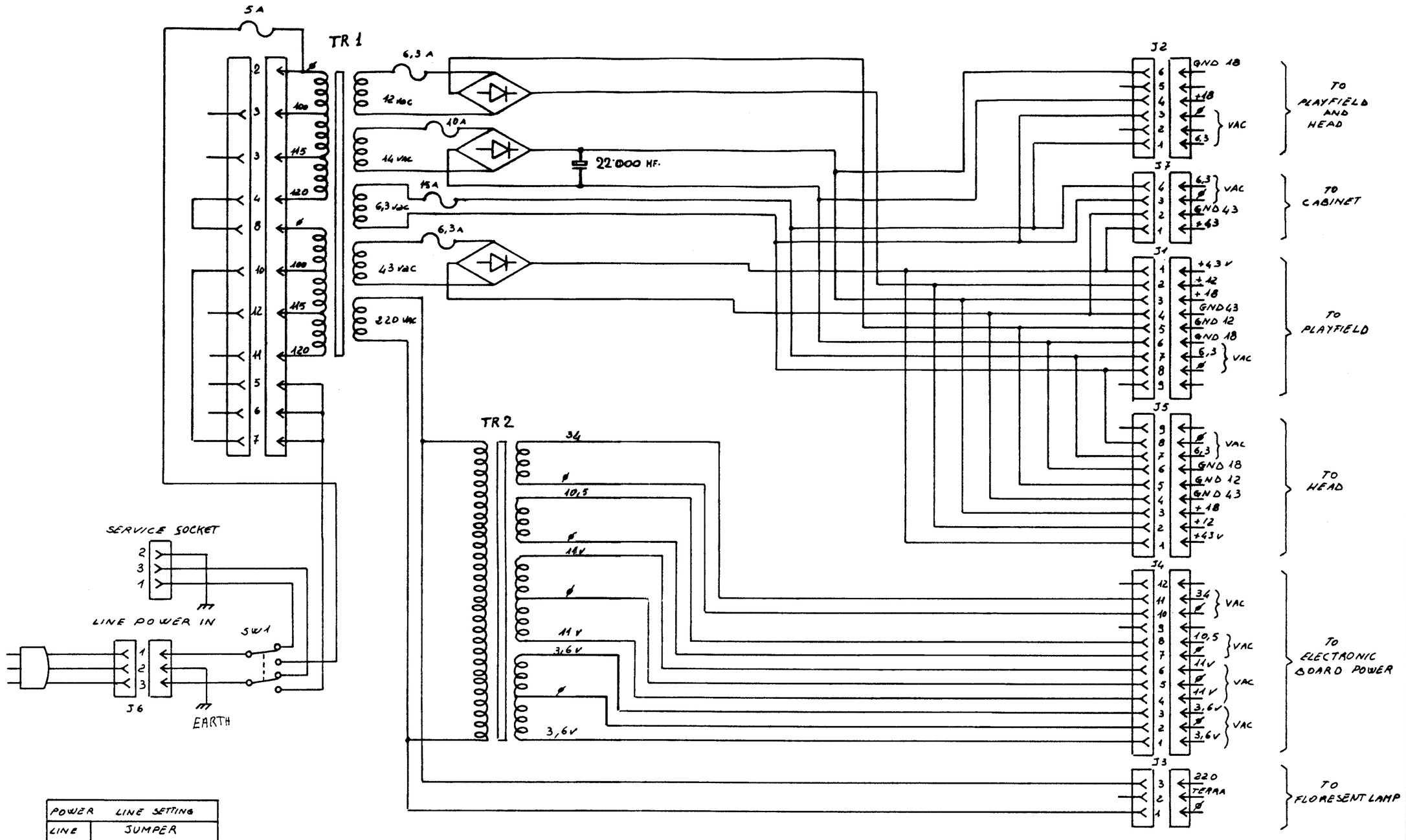

POWER LINE	SETTING		
LINE	JUMPER		
220	4÷8	7÷10	–
240	4÷8	7÷11	–
120	2÷8	4÷6	7÷11
100	2÷8	9÷6	7÷10
115	2÷8	3÷6	7÷12
200	9÷8	7÷10	–

tecnoplay
Via F.Biondo, 61-Serravalle 47031 Rep. S.Marino

DISEGNO RISERVATO A NORMA DI LEGGE È VIETATA LA RIPRODUZIONE E LA DIVULGAZIONE SENZA APPROVAZIONE

PARTICOLARE	DESCRIZIONE				
/	POWER SUPPLY WIRING DIAGRAM				
ASSEMBLATO	MATERIALE	TRATTAMENTO	PESO IN GR.	SCALA	
SHEET 1/1	/	/	/	--	
DISEGNATORE	DATA	APPROV.NE	DATA	1° REV	DATA	2° REV	DATA	FOGLIO
Franco	16/01/82							